PHYTER® Industrial Temperature 10/100Mbs Ethernet Physical Layer Transceiver

Check for Samples: TLK110

1 Introduction

1.1 Features

- **Low Power Consumption:**
  - **Single Supply: <205mW PHY, 275mW with Center Tap (Typical)**
  - **Dual Supplies: <126mW PHY, 200mW with Center Tap (Typical)**
- **Programmable Power Back Off to reduce PHY power up to 20% in systems with shorter cables**
- **Low deterministic latency supports IEEE1588 implementation**
- **Cable Diagnostics**
- **Programmable Fast Link Down Modes, <10µs reaction time**
- **Variable I/O voltage range: 1.8V to 3.3V**
- **3.3V MAC Interface**
- **Fixed TX Clock to XI, with programmable phase shift**
- **Auto-MDIX for 10/100Mbs**
- **Energy Detection Mode**
- **25 MHz Clock Out**
- **MII and RMII Capabilities**
- **Serial Management Interface**
- **IEEE 802.3u MII**
- **IEEE 802.3u Auto-Negotiation and Parallel Detection**
- **Error-Free 100Base-T Operation up to 150 Meters Under Typical Conditions**
- **Error-Free 10Base-T Operation up to 300 Meters Under Typical Conditions**
- **IEEE 802.3u ENDEC, 10Base-T Transceivers and Filters**
- **IEEE 802.3u PCS, 100Base-TX Transceivers**
- **IEEE 1149.1 JTAG**
- **Integrated ANSI X3.263 Compliant TP-PMD Physical Sublayer with Adaptive Equalization and Baseline Wander Compensation**
- **Programmable LED Support Link, 10/100Mbs Mode, Activity, and Collision Detect**
- **10/100Mbs Packet BIST (Built in Self Test)**
- **HBM ESD protection on RD± and TD± of 16kV**
- **48-pin LQFP Package (7mm) × (7mm)**

1.2 Applications

- **Industrial Networks and Factory Automation**
- **Real Time Industrial Ethernet Applications such as EtherCAT®, Ethernet/IP™, ProfiNET®, SERCOSIII and VARAN**
- **Motor and Motion Control**
- **General Embedded Applications**

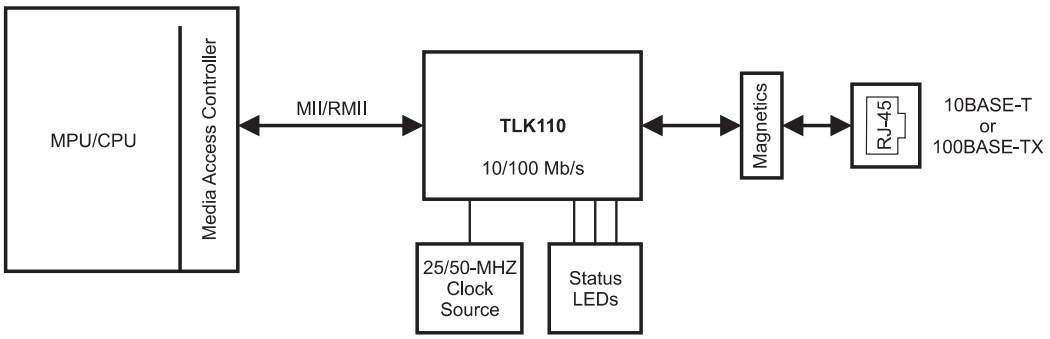

Please be aware that an important notice concerning availability, standard warranty, and use in critical applications of Texas Instruments semiconductor products and disclaimers thereto appears at the end of this data sheet.

PHYTER is a registered trademark of Texas Instruments.
Ethernet/IP is a trademark of ControlNet International, Ltd. under license by Open DeviceNet Vendor Association, Inc..
EtherCAT is a registered trademark of EtherCAT Technology Group.
ProfiNET is a registered trademark of PROFIBUS and PROFINET International (PI).

PRODUCTION DATA information is current as of publication date. Products conform to specifications per the terms of the Texas Instruments standard warranty. Production processing does not necessarily include testing of all parameters.

Copyright © 2011–2014, Texas Instruments Incorporated

1.3 Device Overview

The TLK110 is a single-port Ethernet PHY for 10Base-T and 100Base TX signaling. This device integrates all the physical-layer functions needed to transmit and receive data on standard twisted-pair cables. The TLK110 supports the standard Media Independent Interface (MII) and Reduced Media Independent Interface (RMII) for direct connection to a Media Access Controller (MAC).

The TLK110 is designed for power-supply flexibility, and can operate with a single 3.3V power supply or with combinations of 3.3V and 1.55V power supplies for reduced power operation.

The TLK110 uses mixed-signal processing to perform equalization, data recovery, and error correction to achieve robust operation over CAT 5 twisted-pair wiring. This device not only meets the requirements of IEEE 802.3, but maintains high margins in terms of cross-talk and alien noise.

The TLK110 Ethernet PHY has a special Power Back Off mode to conserve power in systems with relatively short cables. This mode provides the flexibility to reduce system power when the system is not required to drive the standard IEEE 802.3 100m cable length, or the extended 150m, error-free cable reach of the TLK110. For more detail, see application note SLLA328.

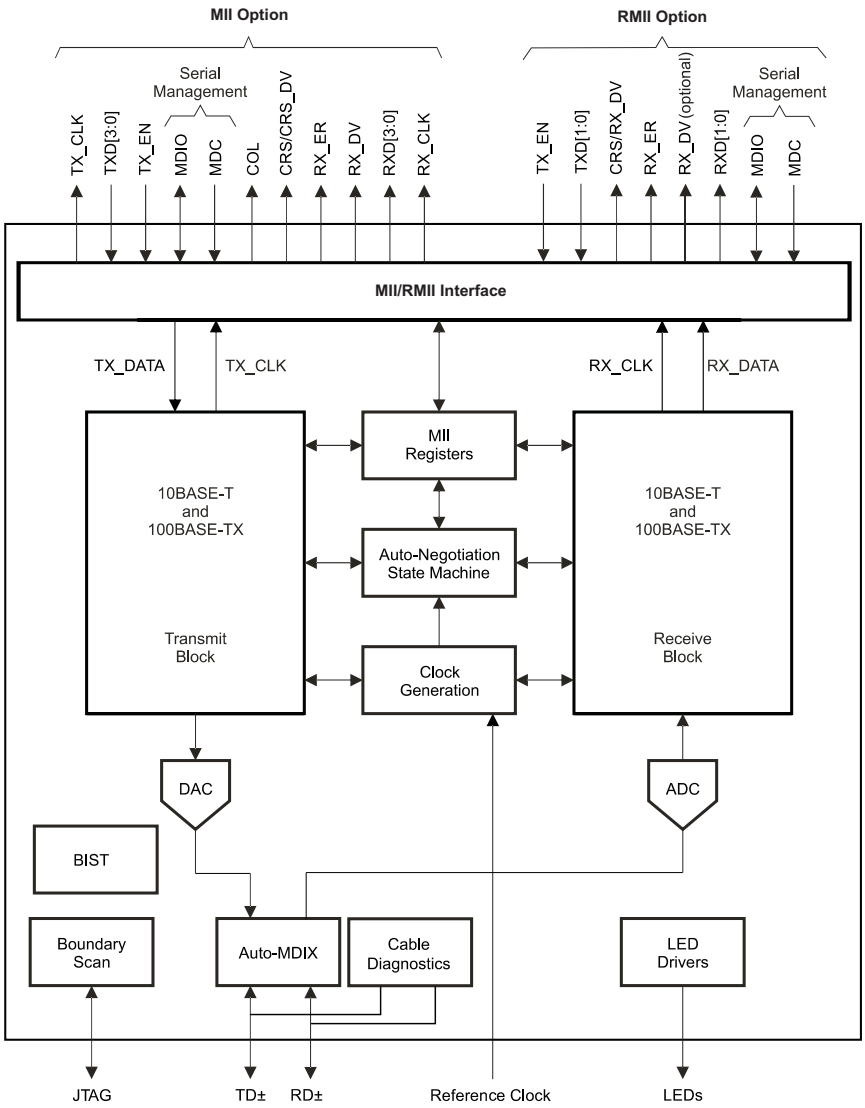

Figure 1-1. TLK110 Functional Block Diagram

Copyright © 2011–2014, Texas Instruments Incorporated

This integrated circuit can be damaged by ESD. Texas Instruments recommends that all integrated circuits be handled with appropriate precautions. Failure to observe proper handling and installation procedures can cause damage.

ESD damage can range from subtle performance degradation to complete device failure. Precision integrated circuits may be more susceptible to damage because very small parametric changes could cause the device not to meet its published specifications.

1 Introduction **1**
1.1 Features 1
1.2 Applications 1
1.3 Device Overview 2
2 Pin Descriptions **4**
2.1 Pin Layout 4
2.2 Serial Management Interface (SMI) 5
2.3 MAC Data Interface 5
2.4 10Mbs and 100Mbs PMD Interface 6
2.5 Clock Interface 6
2.6 LED Interface 6
2.7 JTAG Interface 6
2.8 Reset and Power Down 7
2.9 Power and Bias Connections 7
3 Hardware Configuration **7**
3.1 Bootstrap Configuration 8
3.2 Power Supply Configuration 9
3.3 IO Pins Hi-Z State During Reset 11
3.4 Auto-Negotiation 11
3.5 Auto-MDIX 12
3.6 MII Isolate Mode 12
3.7 PHY Address 12
3.8 Software Strapping Mode 14
3.9 LED Interface 16
3.10 Loopback Functionality 17
3.11 BIST 19
3.12 Cable Diagnostics 19
4 Interfaces **21**
4.1 Media Independent Interface (MII) 21
4.2 Reduced Media Independent Interface (RMII) 22
4.3 Serial Management Interface 23
5 Architecture **27**
5.1 100Base-TX Transmit Path 27
5.2 100Base-TX Receive Path 30
5.3 10Base-T Receive Path 32
5.4 Auto Negotiation 33
5.5 Link Down Functionality 35
6 Reset and Power Down Operation **37**
6.1 Hardware Reset 37
6.2 Software Reset 37
6.3 Power Down/Interrupt 37
6.4 Power Save Modes 38
7 Design Guidelines **39**
7.1 TPI Network Circuit 39
7.2 Clock In (XI) Requirements 39
8 Register Block **41**
8.1 Register Definition 46
8.2 Cable Diagnostic Control Register (CDCR) 70
8.3 PHY Reset Control Register (PHYRCR) 71
8.4 TX_CLK Phase Shift Register (TXCPSR) 71
8.5 Power Back Off Control Register (PWRBOCR) 71
8.6 Voltage Regulator Control Register (VRCR) 71
8.7 Cable Diagnostic Configuration/Result Registers 72
9 Electrical Specifications **78**
9.1 ABSOLUTE MAXIMUM RATINGS 78
9.2 RECOMMENDED OPERATING CONDITIONS 78
9.3 48-Pin Industrial Device Thermal Characteristics 78
9.4 DC CHARACTERISTICS, VDD_IO 79
9.5 DC CHARACTERISTICS 79
9.6 Power Supply Characteristics 80
9.7 AC Specifications 81
Revision History **96**
Revision History **96**

Copyright © 2011–2014, Texas Instruments Incorporated

2 Pin Descriptions

The TLK110 pins fall into the following interface categories (subsequent sections describe each interface):

- Serial Management Interface
- MAC Data Interface
- Clock Interface
- LED Interface
- JTAG Interface
- Reset and Power Down
- Bootstrap Configuration Inputs
- 10/100Mbs PMD Interface
- Special Connect Pins
- Power and Ground pins

Note: Configuration pin option. See Section 3.1 for *Jumper Definitions*.

The definitions below define the functionality of each pin.

Type: I	Input	Type: OD	Open Drain
Type: O	Output	Type: PD, PU	Internal Pulldown/Pullup
Type: I/O	Input/Output	Type: S	Configuration Pin (All configuration pins have weak internal pullups or pulldowns. Use an external 2.2kΩ resistor if you need a different default value. See Section 3.1 for details.)

2.1 Pin Layout

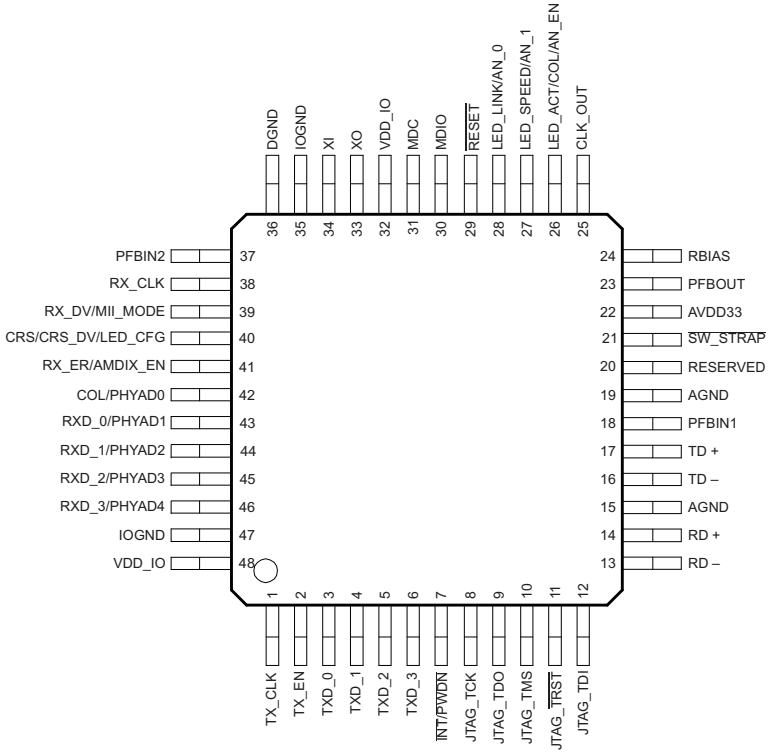

Figure 2-1. TLK110 PIN DIAGRAM, TOP VIEW

This document describes signals that take on different names depending on configuration. In such cases, the different names are placed together and separated by slash (/) characters. For example, "RXD_3 / PHYAD4". Active low signals are represented by overbars.

Copyright © 2011–2014, Texas Instruments Incorporated

2.2 Serial Management Interface (SMI)

PIN		TYPE	DESCRIPTION
NAME	NO.		
MDC	31	I	**MANAGEMENT DATA CLOCK:** Clock signal for the management data input/output (MDIO) interface. The maximum MDC rate is 25MHz; there is no minimum MDC rate. MDC is **not** required to be synchronous to the TX_CLK or the RX_CLK.
MDIO	30	I/O	**MANAGEMENT DATA I/O:** Bidirectional command / data signal synchronized to MDC. Either the local controller or the TLK110 may drive the MDIO signal. This pin requires a pull-up resistor with value 2.2kΩ.

2.3 MAC Data Interface

PIN		TYPE	DESCRIPTION
NAME	NO.		
TX_CLK	1	O, PD	**MII TRANSMIT CLOCK:** MII Transmit Clock provides the 25MHz or 2.5MHz reference clock depending on the speed. Note that in MII mode, this clock has constant phase referenced to REF_CLK. Applications requiring such constant phase may use this feature. Unused in RMII mode. In RMII, X1 reference clock is used as the clock for both transmit and receive.
TX_EN	2	I, PD	**TRANSMIT ENABLE:** TX_EN is presented on the rising edge of the TX_CLK . TX_EN indicates the presence of valid data inputs on TXD[3:0] in MII mode, and on TXD [1:0] in the RMII mode. TX_EN is an active high signal.
TXD_0 TXD_1 TXD_2 TXD_3	3 4 5 6	I, PD	**TRANSMIT DATA:** In MII mode, the transmit data nibble received from the MAC is synchronous to the rising edge of the TX_CLK signal. In RMII mode, TXD [1:0] received from the MAC is synchronous to the 50MHz reference clock on XI.
RX_CLK	38	O	**RECEIVE CLOCK:** In MII mode it is the receive clock that provides either a 25MHz or 2.5MHz reference clock, depending on the speed, that is derived from the received data stream.
RX_DV / MII_MODE	39	S, O, PD	**RECEIVE DATA VALID:** This pin indicates valid data is present on the RXD [3:0] for MII mode or on RXD [1:0] for RMII mode, independently from Carrier Sense.
RX_ER / AMDIX_EN	41	S, O, PU	**RECEIVE ERROR**: This pin indicates that an error symbol has been detected within a received packet in both MII and RMII mode. In MII mode, RX_ER is asserted high synchronously to RX_CLK and in RMII mode, synchronously to XI (50MHz). This pin is not required to be used by the MAC, in either MII or RMII, because the PHY is corrupting data on a receive error.
RXD_0 / PHYAD1 RXD_1 / PHYAD2 RXD_2 / PHYAD3 RXD_3 / PHYAD4	43 44 45 46	S, O, PD	**RECEIVE DATA:** Symbols received on the cable are decoded and presented on these pins synchronous to RX_CLK. They contain valid data when RX_DV is asserted. A nibble RXD [3:0] is received in the MII mode and 2-bits RXD[1:0] is received in the RMII Mode. PHY address pins PHYAD[4:1] are multiplexed with RXD [3:0], and are pulled down. PHYAD0 (LSB of the address) is multiplexed with COL on pin 42, and is pulled up. If no external pullup/pulldown is present, the default address is 0x01.
CRS / LED_CFG	40	S, O, PU	**CARRIER SENSE:** In MII mode this pin is asserted high when the receive medium is non-idle. **CARRIER SENSE/RECEIVE DATA VALID:** In RMII mode, this pin combines the RMII Carrier and Receive Data Valid indications.
COL / PHYAD0	42	S, O, PU	**COLLISION DETECT:** For MII mode in Full Duplex Mode this pin is always low. In 10Base-T/100Base-TX half-duplex modes, this pin is asserted HIGH only when both transmit and receive media are non-idle. This pin is not used in RMII mode.

Copyright © 2011–2014, Texas Instruments Incorporated

2.4 10Mbs and 100Mbs PMD Interface

PIN		TYPE	DESCRIPTION
NAME	NO.		
TD–, TD+	16, 17	I/O	**Differential common driver transmit output (PMD Output Pair):** These differential outputs are automatically configured to either 10Base-T or 100Base-TX signaling. In Auto-MDIX mode of operation, this pair can be used as the Receive Input pair. These pins require 3.3V bias for operation.
RD–, RD+	13, 14	I/O	**Differential receive input (PMD Input Pair):** These differential inputs are automatically configured to accept either 100Base-TX or 10Base-T signaling. In Auto-MDIX mode of operation, this pair can be used as the Transmit Output pair. These pins require 3.3V bias for operation.

2.5 Clock Interface

PIN		TYPE	DESCRIPTION
NAME	NO.		
XI	34	I	**CRYSTAL/OSCILLATOR INPUT:** **MII reference clock:** Reference clock. 25MHz ±50ppm-tolerance crystal reference or oscillator input. The device supports either an external crystal resonator connected across pins XI and XO, or an external CMOS-level oscillator source connected to pin XI only. **RMII reference clock:** Primary clock reference input for the RMII mode. The input must be connected to a 50MHz ±50ppm-tolerance CMOS-level oscillator source.
XO	33	O	**CRYSTAL OUTPUT:** Reference Clock output. XO pin is used for crystal only. This pin should be left floating when an oscillator input is connected to XI.
CLKOUT	25	O	**CLOCK OUTPUT:** In MII mode, this pin provides a 25 MHz clock output to the system. In RMII mode, this pin provides a 50MHz clock output. This feature allows other devices to use the reference clock from the TLK110 without requiring additional clock sources.

2.6 LED Interface

(See Table 3-3 for LED Mode Selection)

PIN		TYPE	DESCRIPTION	
NAME	NO.			
LED_LINK / AN_0	28	S, O, PU	**LED Pin** to indicate status	
			Mode 1	**LINK Indication LED**: Indicates the status of the link. When the link is good, the LED is ON.
			Mode 2 and Mode 3	**ACT indication LED**: Indicates transmit and receive activity in addition to the status of the Link. The LED is ON when Link is good. The LED blinks when the transmitter or receiver is active.
LED_SPEED / AN_1	27	S, O, PU	**LED Pin** to indicate the speed of the link. **SPEED Indication LED** indicates whether the link is 100Mb/s or 10Mb/s. The LED is ON when the link speed is 100Mbs and OFF when it is 10Mbs.	
LED_ACT / AN_EN	26	S, O, PU	**LED Pin** to indicate status.	
			Mode 1	**ACT indication LED**: Indicates if there is any activity on the link. The LED is ON (pulse) when activity is present on either Transmit or Receive channel.
			Mode 2	**COL indication LED**: Indicates collision detection.
			Mode 3	may be programmed to **DUPLEX Indication LED** and indicates Full-duplex status.

2.7 JTAG Interface

PIN		TYPE	DESCRIPTION
NAME	NO.		
JTAG_TCK	8	I, PU	**JTAG Test Clock:** This pin has a weak internal pullup.
JTAG_TDI	12	I, PU	**JTAG Test Data Input:** This pin has a weak internal pullup.
JTAG_TDO	9	O	**JTAG Test Data Output**

Copyright © 2011–2014, Texas Instruments Incorporated

PIN		TYPE	DESCRIPTION
NAME	NO.		
JTAG_TMS	10	I, PU	**JTAG Test Mode Select:** This pin has a weak internal pullup.
JTAG_$\overline{\text{TRST}}$	11	I, PU	**JTAG Reset:** This pin is an active-low asynchronous test reset with a weak internal pullup.

2.8 Reset and Power Down

PIN		TYPE	DESCRIPTION
NAME	NO.		
$\overline{\text{RESET}}$	29	I, PU	This pin is an active-low reset input that initializes or re-initializes all the internal registers of the TLK110. Asserting this pin low for at least 1µs will force a reset process to occur. All jumper options are reinitialized as well.
$\overline{\text{INT}}$ / $\overline{\text{PWDN}}$	7	IO, OD, PU	Register access is required for this pin to be configured either as power down or as an interrupt. The default function of this pin is power down. When this pin is configured for a power down function, an active low signal on this pin places the device in power down mode. When this pin is configured as an interrupt pin, then this pin is asserted low when an interrupt condition occurs. The pin has an open-drain output with a weak internal pull-up. Some applications may require an external pull-up resistor.

2.9 Power and Bias Connections

PIN		TYPE	DESCRIPTION
NAME	NO.		
RBIAS	24	I	**Bias Resistor Connection**: Use a 4.87kΩ 1% resistor connected from RBIAS to GND.
PFBOUT	23	O	**Power Feedback Output**: Place 10µf and 0.1µF capacitors (ceramic preferred) close to PFBOUT. In single-supply operation, connect this pin to PFBIN1 and PFBIN2 (pin 18 and pin 37). See Figure 3-1 for proper placement. In multiple supply operation, this pin is not used.
PFBIN1 PFBIN2	18 37	I	**Power Feedback Input**: These pins are fed with power from PFBOUT (pin 23) in single supply operation. In multiple supply operation, connect a 1.55V external power supply to these pins. Connect a small capacitor of 0.1µF close to each pin. To power down the internal linear regulator, write to register 0x00d0.
VDD_IO	32, 48	P	I/O 3.3V, 2.5V, or 1.8V Supply - For details, see Section 3.2.3
IOGND	35, 47	P	I/O ground
DGND	36	P	Digital ground
AVDD33	22	P	Analog 3.3V power supply
AGND	15, 19	P	Analog ground
RESERVED	20	I/O	**RESERVED:** This pin must be pulled-up through 2.2kΩ resistor to AVDD33 supply.

3 Hardware Configuration

This section includes information on the various configuration options available with the TLK110. The configuration options described below include:

- Bootstrap Configuration
- Power Supply Configuration
- IO Pins Hi-Z State During Reset
- Auto-Negotiation
- Auto-MDIX
- MII Isolate mode
- PHY Address
- Software Strapping Mode
- LED Interface
- Loopback Functionality
- BIST
- Cable Diagnostics

3.1 Bootstrap Configuration

Bootstrap configuration is a convenient way to configure the TLK110 into specific modes of operation. Some of the functional pins are used as configuration inputs. The logic states of these pins are sampled during reset and are used to configure the device into specific modes of operation. The table below describes bootstrap configuration.

A 2.2kΩ resistor is used for pull-down or pull-up to change the default configuration. If the default option is desired, then there is no need for external pull-up or pull down resistors. Because these pins may have alternate functions after reset is deasserted, they must not be connected directly to VCC or GND.

<table>
<tr><th colspan="2">PIN</th><th>TYPE</th><th></th></tr>
<tr><th>NAME</th><th>NO.</th><th></th><th>DESCRIPTION</th></tr>
<tr><td>PHYAD0 (COL)
PHYAD1 (RXD_0)
PHYAD2 (RXD_1)
PHYAD3 (RXD_2)
PHYAD4 (RXD_3)</td><td>42
43
44
45
46</td><td>S, O, PD / PU</td><td>PHY Address [4:0]: The TLK110 provides five PHY address pins, the states of which are latched into an internal register at system hardware reset. The TLK110 supports PHY Address values 0 (<00000>) through 31 (<11111>). PHYAD[4:1] pins have weak internal pull-down resistors, and PHYAD[0] has weak internal pull-up resistor, setting the default PHYAD if no external resistors are connected.</td></tr>
<tr><td>$\overline{\text{SW_STRAP}}$</td><td>21</td><td>I</td><td>Software Strapping Mode: The TLK110 provides a mechanism to extend the number of configuration pins to allow wider system programmability of PHY functions. An external pull-down will cause the device to enter SW Strapping Mode. In this mode the device will wake up after Power-up or Reset in Power-Down mode, this will allow the system processor to access dedicated Strapping Registers and configure modes of operation. An access to SW Strapping Mode Release register must be done to take the device out of power-down mode. See Section 3.8 for more details. An external pull-up resistor should be used to disable Software Strapping Mode.</td></tr>
<tr><td>AN_EN
(LED_ACT)
AN_1
(LED_SPEED)
AN_0 (LED_LINK)</td><td>26
27
28</td><td>S, O, PU</td><td>AN_EN: A high level on this pin puts the part into advertised Auto-Negotiation mode with the capability set by AN_0 and AN_1 pins. A low level on AN_EN puts the part into Forced Mode with the capability set by AN_0 and AN_1 pins.

AN_0, AN_1: These input pins control the forced or advertised operating mode according to the following table. The value on these pins is set by connecting the input pins to GND (0) or VCC (1) through 2.2kΩ resistors. DO NOT connect these pins directly to GND or VCC.

The states of these pins are latched into the Basic Mode Control Register and the Auto_Negotiation Advertisement Register during Hardware-Reset.

The default is 111 because these pins have internal pull-ups.
<table>
<tr><th>AN_EN</th><th>AN_1</th><th>AN_0</th><th>Forced Mode</th></tr>
<tr><td>0</td><td>0</td><td>0</td><td>10Base-T, Half-Duplex</td></tr>
<tr><td>0</td><td>0</td><td>1</td><td>10Base-T, Full-Duplex</td></tr>
<tr><td>0</td><td>1</td><td>0</td><td>100Base-TX, Half-Duplex</td></tr>
<tr><td>0</td><td>1</td><td>1</td><td>100Base-TX, Full-Duplex</td></tr>
<tr><th>AN_EN</th><th>AN_1</th><th>AN_0</th><th>Advertised Mode</th></tr>
<tr><td>1</td><td>0</td><td>0</td><td>10Base-T, Half or Full-Duplex</td></tr>
<tr><td>1</td><td>0</td><td>1</td><td>100Base-TX, Half or Full-Duplex</td></tr>
<tr><td>1</td><td>1</td><td>0</td><td>10Base-T, Half-Duplex
100Base-TX, Half-Duplex</td></tr>
<tr><td>1</td><td>1</td><td>1</td><td>10Base-T, Half orFull-Duplex
100Base-TX, Half or Full-Duplex</td></tr>
</table></td></tr>
<tr><td>LED_CFG (CRS)</td><td>40</td><td>S, O, PU</td><td>LED Configuration: This option, along with the LEDCR register bit, selects the mode of operation of the LED pins. Default is Mode 1. All modes are also configurable via register access. See PHY Control Register (PHYCR), Address 0x0019</td></tr>
<tr><td>AMDIX_EN
(RX_ER)</td><td>41</td><td>S, O, PU</td><td>Auto-MDIX Enable: This option sets the Auto-MDIX mode. By default, it enables Auto-MDIX. An external pull-down resistor disables Auto-MDIX mode.</td></tr>
<tr><td>MII_MODE
(RX_DV)</td><td>39</td><td>S, O, PD</td><td>MII Mode Select: This option selects the operating mode of the MAC data interface. This pin has a weak internal pull-down, and it defaults to normal MII operation mode. An external pull-up causes the device to operate in RMII mode.</td></tr>
</table>

Copyright © 2011–2014, Texas Instruments Incorporated

3.2 Power Supply Configuration

The TLK110 provides best-in-class flexibility of power supplies.

3.2.1 Single Supply Operation

If a single 3.3V power supply is desired, the TLK110 internal regulator provides the necessary core supply voltages. Ceramic capacitors of 10µf and 0.1µf should be placed close to the PFBOUT (pin 23) which is the output of the internal regulator. The PFBOUT pin should be connected to the PFBIN1 and PFBIN2 on the board. A small capacitor of 0.1µF should be placed close to the PFBIN1 (pin 18) and PFBIN2 (pin 37). To operate in this mode, connect the TLK110 supply pins as shown in Figure 3-1.

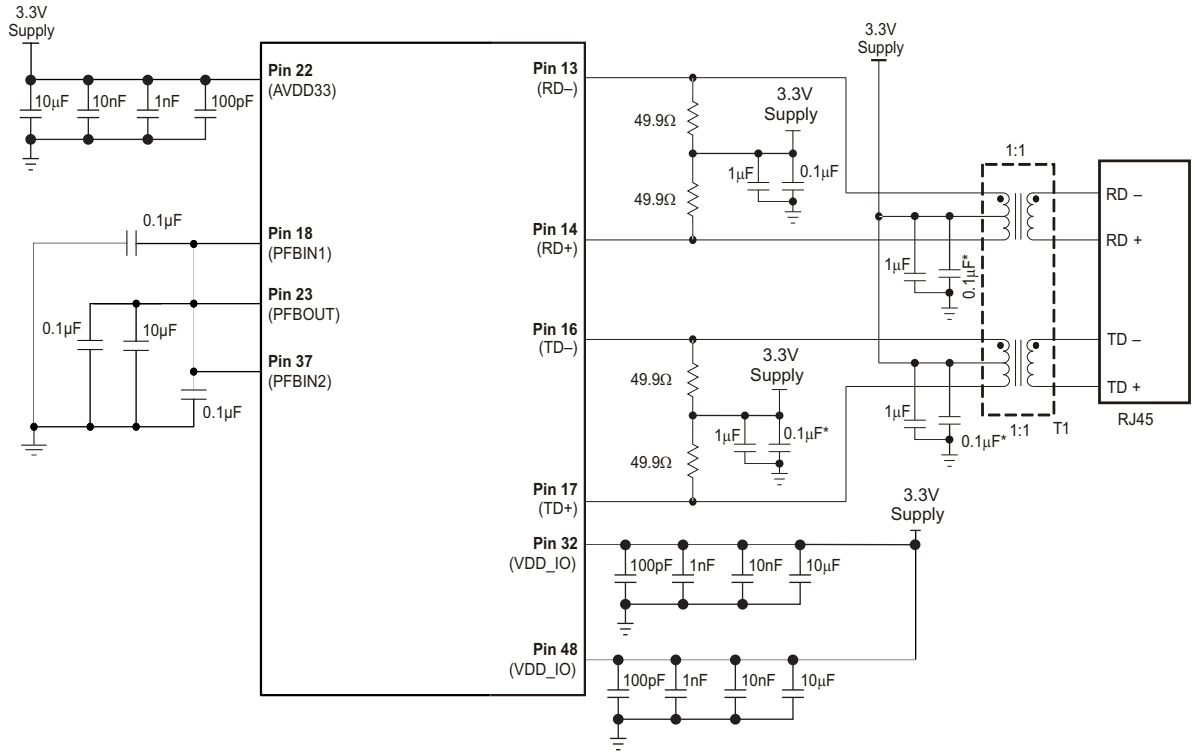

Figure 3-1. Power Connections for Single Supply Operation

3.2.2 Dual Supply Operation

When a 1.55V external power rail is available, the TLK110 can be configured as shown in Figure 3-2. PFBOUT (pin 23) is left floating. The 1.55V external supply is connected to PFBIN1 (pin 18) and PFBIN2 (pin 37). Furthermore, to lower the power consumption, the internal regulator should be powered down by writing '1' to bit 15 of the VRCR register (0x00d0h).

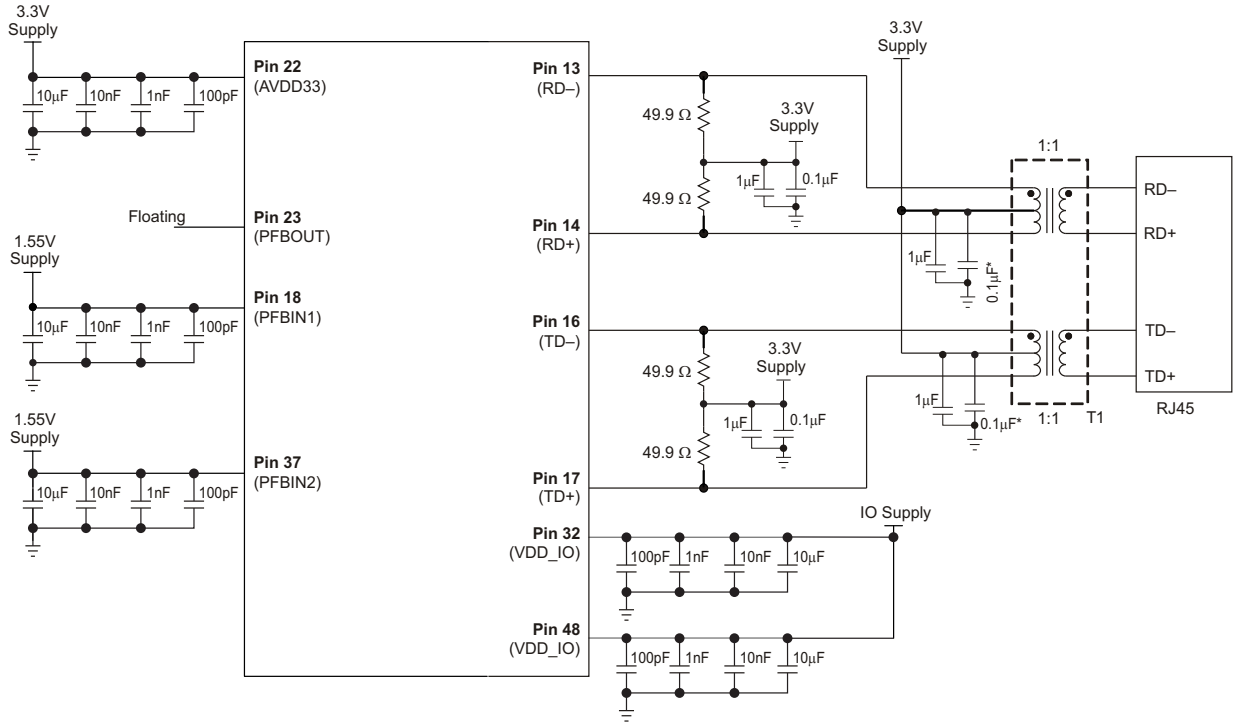

Figure 3-2. Power Connections for Dual Supply Operation

When operating with dual supplies, follow these guidelines:

- When powering up, ramp up the 3.3V supply before the 1.55V supply.
- When powering down, turn off the 1.55V supply before turning off the 3.3V supply.
- Use the external $\overline{\text{RESET}}$ pin after power up to reset the PHY.
- To use the internal power-on reset, PFBIN1 and PFBIN2 must be operational less than 100ms after 3.3V rises to detect the internal RESET.

3.2.3 Variable IO Voltage

The TLK110 digital IO pins can operate with a variable supply voltage. While the primary applications will use 3.3V, VDD_IO can also operate on 2.5V, and for MII mode only, VDD_IO of 1.8V can be used as well. For more details, see Section 9.4.

Copyright © 2011–2014, Texas Instruments Incorporated

3.3 IO Pins Hi-Z State During Reset

The following IO or output pins are in hi-Z state when $\overline{\text{RESET}}$ is active (Low).

Pin Name	Type	Internal PU/PD	Pin Name	Type	Internal PU/PD
TXD_3	IO	PD	RX_ER	IO	PU
TX_EN	IO	PD	COL	IO	PU
$\overline{\text{INT}}$/$\overline{\text{PWDN}}$	IO	PU	RXD_0	IO	PD
LED_ACT	IO	PU	RXD_1	IO	PD
LED_SPEED	IO	PU	RXD_2	IO	PD
LED_LINK	IO	PU	RXD_3	IO	PD
MDIO	IO		TX_CLK	O	
RX_DV	IO	PD	CLK25MHz_OUT	O	
CRS	IO	PU	RX_CLK	O	

3.4 Auto-Negotiation

The TLK110 device auto-negotiates to operate in 10Base-T or 100Base-TX. With Auto-Negotiation enabled, the TLK110 negotiates with the link partner to determine the speed and duplex mode. If the link partner cannot Auto-Negotiate, the TLK110 device enters parallel-detect mode to determine the speed of the link partner. Parallel-detect mode uses fixed half-duplex mode.

The TLK110 supports four different Ethernet protocols (10Mbs Half-Duplex, 10Mbs Full-Duplex, 100Mbs Half-Duplex, and 100Mbs Full-Duplex). Auto-Negotiation selects the highest performance protocol based on the advertised ability of the Link Partner. Control the Auto-Negotiation function within the TLK110 by:

1. Internal register access, or
2. Configuring the AN_EN, AN_1 and AN_0 pins

The state of the AN_EN, AN_0 and AN_1 pins determine whether the TLK110 is forced into a specific mode, or if Auto-Negotiation advertises a specific ability (or set of abilities) as given in Table 3-1. These pins allow configuration options to be selected without requiring internal register access. The state of AN_EN, AN_0 and AN_1, upon power-up/reset, determines the state of bits [8:5] of the ANAR register (0x04h).

Internal register access controls the Auto-Negotiation function, as defined by the IEEE 802.3u specification. For further detail regarding Auto-Negotiation, see Clause 28 of the IEEE 802.3u specification.

Table 3-1. Auto-Negotiation Modes

AN_EN	AN_1	AN_0	Forced Mode
0	0	0	10Base-T, Half-Duplex
0	0	1	10Base-T, Full-Duplex
0	1	0	100Base-TX, Half-Duplex
0	1	1	100Base-TX, Full-Duplex
AN_EN	**AN_1**	**AN_0**	**Advertised Mode**
1	0	0	10Base-T, Half or Full-Duplex
1	0	1	100Base-TX, Half or Full-Duplex
1	1	0	10Base-T, Half Duplex 100Base-TX, Half Duplex
1	1	1	10Base-T, Half or Full-Duplex 100Base-TX, Half or Full-Duplex

Copyright © 2011–2014, Texas Instruments Incorporated

3.5 Auto-MDIX

The TLK110 device automatically determines whether or not it needs to cross over between pairs, eliminating the requirement for an external crossover cable. If the TLK110 interoperates with a device that implements MDI/MDIX crossover, a random algorithm as described in IEEE 802.3 determines which device performs the crossover.

Auto-MDIX is enabled by default and can be configured via pin strap, SW Strap register SWSCR1 (0x09h), bit 14 or via register PHYCR (0x19h), bit 15.

The crossover can be manually forced through bit 14 of the PHYCR (0x19h) register. Neither Auto-Negotiation nor Auto-MDIX is required to be enabled in forcing crossover of the MDI pairs.

Auto-MDIX can be used in the forced 100Base-TX mode. Because in modern networks all the nodes are 100Base-TX, having the Auto-MDIX working in the forced 100Base-TX mode resolves the link faster without the need for the long Auto-Negotiation period.

3.6 MII Isolate Mode

The TLK110 can be put into MII-Isolate mode by writing bit 10 of the BMCR register.

When in the MII-Isolate mode, the TLK110 ignores packet data present at the TXD[3:0], TX_EN inputs, and presents a high impedance on the TX_CLK, RX_CLK, RX_DV, RX_ER, RXD[3:0], COL, and CRS outputs. When in isolate mode, the TLK110 continues to respond to all management transactions.

When in isolate mode, the PMD output pair does not transmit packet data, but continues to source 100Base-TX scrambled idles or 10Base-T normal link pulses. The TLK110 can auto-negotiate or parallel detect on the receive signal at the PMD input pair. A valid link can be established for the receiver even when the TLK110 is in Isolate mode.

3.7 PHY Address

The 5 PHY address inputs pins are shared with the RXD[3:0] pins and COL pin as shown in Table 3-2.

Table 3-2. PHY Address Mapping

PIN Number	PHYAD FUNCTION	RXD FUNCTION
42	PHYAD0	COL
43	PHYAD1	RXD_0
44	PHYAD2	RXD_1
45	PHYAD3	RXD_2
46	PHYAD4	RXD_3

Each TLK110 or port sharing an MDIO bus in a system must have a unique physical address. With 5 address input pins, the TLK110 can support PHY Address values 0 (<00000>) through 31 (<11111>). The address-pin states are latched into an internal register at device power-up and hardware reset. Because all the PHYAD[4:0] pins have weak internal pull-down/up resistors, the default setting for the PHY address is 00001 (0x01h).

See Figure 3-3 for an example of a PHYAD connection to external components. In this example, the PHYAD configuration results in address 00011 (0x03h).

 Copyright © 2011–2014, Texas Instruments Incorporated

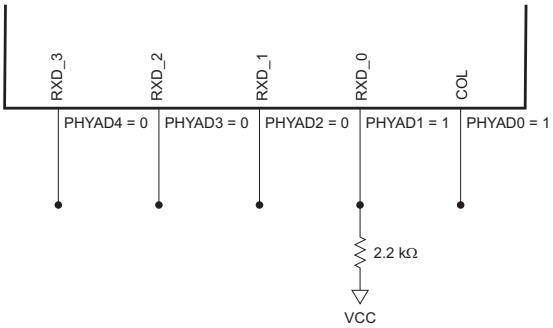

Figure 3-3. PHYAD Configuration Example

3.8 Software Strapping Mode

The TLK110 provides a mechanism to extend the number of configuration pins to allow wider system programmability of PHY functions.

Connecting an external pull-down to pin 21 causes the device to enter SW Strapping Mode after power-up or a hardware reset event. In this mode the device wakes up after power-up/hardware reset in power down mode. While in power down (in SW strap mode only) the PHY allows the system processor to access the dedicated Strapping Registers and configure modes of operation. Once the dedicated Strapping Registers are programmed, setting the SW Strapping Mode Release register bit ("Configuration done"), bit 15 of register SWSCR1(0x0009), must be done in order to take the device out of power-down mode. An internal reset pulse is generated and the SW Strap Register values are latched into internal registers. Unless a new Power-up/HW reset was applied, the configured SW Strap Register values will function as default values. Generation of Software Reset/Software Restart - bits 15 and 14 of register PHYRCR (0x001F) will not clear the configured SW Strap bit values.

There are 3 Software Strapping control registers: SWSCR1 (0x0009), SWSCR2 (0x000A) and SWSCR3(0x000B) contain the configuration bits used as strapping options or virtual strapping pins during HW Reset or Power-Up.

The TLK110 Software Strap mechanism behavior is shown in Figure 3-4.

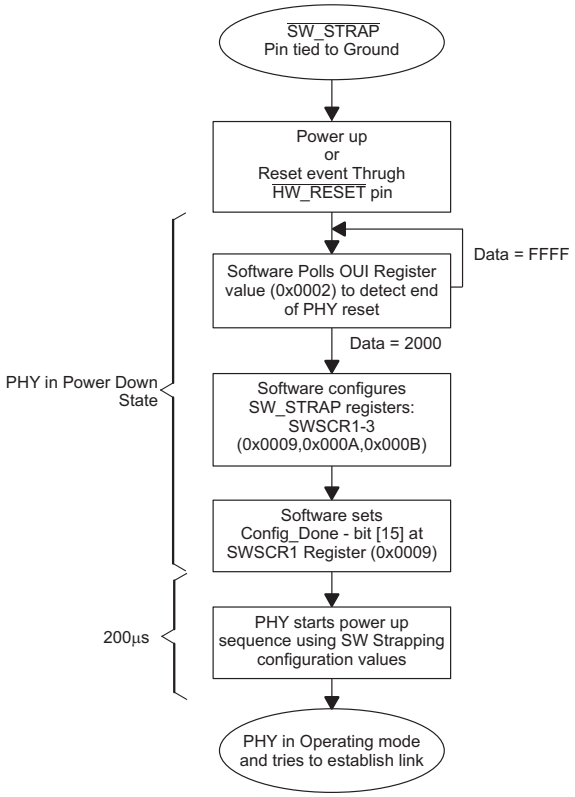

Figure 3-4. TLK110 SW Strap Programming

Copyright © 2011–2014, Texas Instruments Incorporated

Figure 3-5 shows the timing relationship for typical SW Strapping programming.

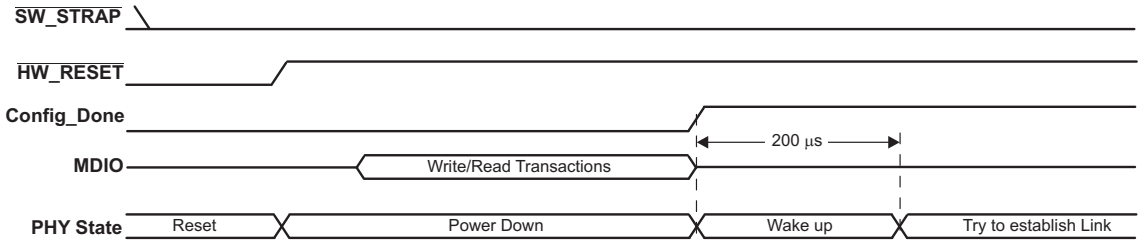

Figure 3-5. TLK110 SW Strap Timing Diagram

Connecting an external pull-up resistor to pin 21 disables Software Strapping Mode during power up or HW Reset.

3.9 LED Interface

The TLK110 supports three configurable Light Emitting Diode (LED) pins. The device supports three LED configurations: Link, Speed, and Activity. Functions are multiplexed among the LEDs into three modes. The LEDs can be controlled by configuration pin and-or internal register bits. Bits 6:5 of the PHY Control register (PHYCR) selects the LED mode as described in Table 3-3.

Table 3-3. LED Mode Select

Mode	LED_CFG[1] (bit 6)	LED_CFG[0] (bit 5) or (pin 40)	LED_LINK	LED_SPEED	LED_ACT
1	don't care	1	ON for Good Link OFF for No Link	ON in 100Mbs OFF in 10Mbs	ON Pulse for Activity OFF for No Activity
2	0	0	ON for Good Link BLINK for Activity	ON in 100Mbs OFF in 10Mbs	ON for Collision OFF for No Collision
3	1	0	ON for Good Link BLINK for Activity	ON in 100Mbs OFF in 10Mbs	ON for Full Duplex OFF for Half Duplex

The LED_LINK pin in Mode 1 indicates the link status of the port. The LED is OFF when no link is present. In Mode 2 and Mode 3 it is ON to indicate that the link is good; BLINK indicates that activity is present on either transmit or receive channel. Bits 10:9 of the LEDCR register (0x18) control the blink rate. The default blink rate is 5Hz.

The LED_SPEED pin indicates the data rate of the port, 10Mbs or 100Mbs. This LED is ON when the device is operating in 100Mbs operation. The functionality of this LED is independent of mode selected.

The LED_ACT pin in Mode 1 indicates the presence of either transmit or receive activity. The LED is ON (Pulse) for Activity and OFF for No Activity. In mode 2 this pin indicates the collision status of the port. The LED is ON when there is a collision and OFF when there is no collision. In mode 3 this pin indicates the Duplex status of operation. The LED is ON for Full Duplex and OFF for Half Duplex.

Bits 8:6 of the LEDCR register define the polarity of the signals on the LED pins.

Because the Auto-Negotiation (AN) configuration options share the LED output pins, the external components required for configuration-pin programming and those for LED usage must be considered in order to avoid contention.

See Figure 3-6 for an example of AN_0, AN_1, AN_EN connections to external components. In this example, the configuration results in Auto-Negotiation with 10/100 Full-Duplex advertised.

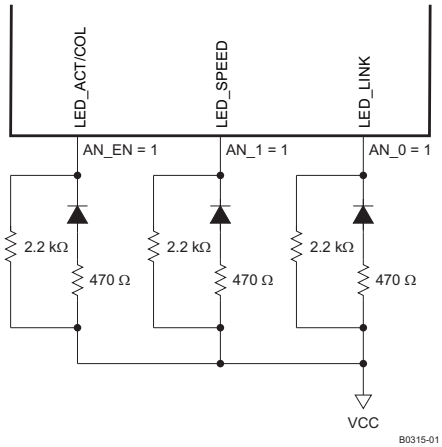

Figure 3-6. AN Pin Configuration and LED Loading Example

Copyright © 2011–2014, Texas Instruments Incorporated

3.10 Loopback Functionality

The TLK110 provides several options for Loopback that test and verify various functional blocks within the PHY. Enabling loopback mode allows in-circuit testing of the TLK110 digital and analog data path. Generally, the TLK110 may be configured to one of the Near-end loopback modes or to the Far-end (reverse) loopback.

3.10.1 Near-End Loopback

Near-end loopback provides the ability to loop the transmitted data back to the receiver via the digital or analog circuitry. The point at which the signal is looped back is selected using loopback control bits with several options being provided. Figure 3-7 shows the PHY near-end loopback functionality.

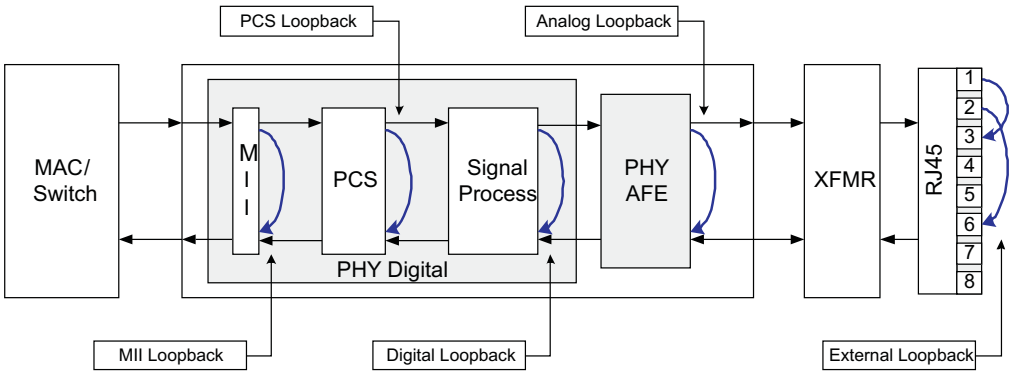

Figure 3-7. Block Diagram, Near-End Loopback Mode

The Near-end Loopback mode is selected by setting the respective bit in the BIST Control Register (BISCR), MII register address 0x0016. MII loopback can be selected by using the BMCR register at address 0x0000, bit [14].

The Near-end Loopback can be selected according to the following:

- Reg 0x0000, Bit [14]: MII Loopback
- Reg 0x0016, Bit [0]: PCS input Loopback
- Reg 0x0016, Bit [1]: PCS output Loopback
- Reg 0x0016, Bit [2]: Digital Loopback
- Reg 0x0016, Bit [3]: Analog Loopback

Table 3-4 describes the available operational modes for each loop mode:

Table 3-4. Loop Modes

Loop Mode	MII	PCS Input	PCS Output	Digital	Analog (1)	External
Operational Setting	Force/ANEG 100/10	Force 100/10	Force 100	Force 100	Force 10/100 ANEG 10	Force/ANEG 100/10
Operational MAC int.	MII Only	MII or RMII	MII or RMII	MII or RMII	MII or RMII	MII or RMII

(1) Requires 100Ω termination

While in MII Loopback mode, there is no link indication, but packets propagate back to the MAC. While in MII Loopback mode the data is looped back, and can also be transmitted onto the media. For transmitting data during MII loopback in 100BT only please use bit [6] in the BISCR Register address 0x0016. For proper operation in Analog Loopback mode, attach 100Ω terminations to the RJ45 connector. External Loopback can be performed while working in normal mode (Bits 3:0 of the BISCR register are asserted to 0, and on the RJ45 connector, pin 1 is connected to pin 3 and pin 2 is connected to pin 6). To maintain the desired operating mode, Auto-Negotiation should be disabled before selecting Loopback mode. This constraint does not apply for external-loopback mode. For selected loopback Delay propagation timing please see Section 9.7.21.

3.10.2 Far-End Loopback

Far-end (Reverse) loopback is a special test mode to allow testing the PHY from the link-partner side. In this mode, data that is received from the link partner passes through the PHY's receiver, looped back on the MII and transmitted back to the link partner. Figure 3-8 shows Far-end loopback functionality.

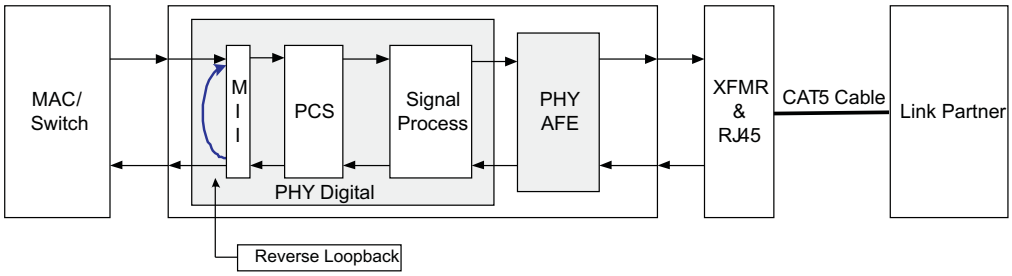

Figure 3-8. Block Diagram, Far-End Loopback Mode

The Reverse Loopback mode is selected by setting bit 4 in the BIST Control Register (BISCR), MII register address 0x0016.

While in Reverse Loopback mode the data is looped back and also transmitted onto the MAC Interface and all data signals that come from the MAC are ignored.

Table 3-5 describes the operating modes for Far-End Loopback.

Table 3-5. Far-End Loopback Modes

Operational MAC Int.	MII Mode	RMII Mode
Operational Setting	Force/ANEG 10/100	Force/ANEG 10

Copyright © 2011–2014, Texas Instruments Incorporated

3.11 BIST

The device incorporates an internal PRBS Built-in Self Test (BIST) circuit to accommodate in-circuit testing or diagnostics. The BIST circuit can be used to test the integrity of the transmit and receive data paths. The BIST can be performed using both internal loopback (digital or analog) or external loopback using a cable fixture. The BIST simulates pseudo-random data transfer scenarios in format of real packets and Inter-Packet Gap (IPG) on the lines. The BIST allows full control of the packet lengths and of the IPG.

The BIST is implemented with independent transmit and receive paths, with the transmit block generating a continuous stream of a pseudo-random sequence. The device generates a 15-bit pseudo-random sequence for the BIST. The received data is compared to the generated pseudo-random data by the BIST Linear Feedback Shift Register (LFSR) to determine the BIST pass/fail status. The number of error bytes that the PRBS checker received is stored in the BICSR1 register (0x001Bh). The status of whether the PRBS checker is locked to the incoming receive bit stream, whether the PRBS has lost sync, and whether the packet generator is busy, can be read from the BISCR register (0x0016h). While the lock and sync indications are required to identify the beginning of proper data reception, for any link failures or data corruption, the best indication is the contents of the the error counter in the BICSR1 register (0x001Bh).

The PRBS test can be put in a continuous mode or single mode by using bit 14 of the BISCR register (0x0016h). In continuous mode, when one of the PRBS counters reaches the maximum value, the counter starts counting from zero again. In single mode, when the PRBS counter reaches its maximum value, the PRBS checker stops counting.

The device allows the user to control the length of the PRBS packet. By programming the BICSR2 register (0x001Ch) one can set the length of the PRBS packet. There is also an option to generate a single-packet transmission of two types, 64 and 1518 bytes, through register bit 13 of the BISCR register (0x0016h). The single generated packet is composed of a constant data.

3.12 Cable Diagnostics

With the vast deployment of Ethernet devices, the need for reliable, comprehensive and user-friendly cable diagnostic tool is more important than ever. The wide variety of cables, topologies, and connectors deployed results in the need to non-intrusively identify and report cable faults. The TI cable-diagnostic unit provides extensive information about cable integrity.

The TLK110 offers the following capabilities in its Cable Diagnostic tools kit:

1. Time Domain Reflectometry (TDR)
2. Active Link Cable Diagnostic (ALCD)

3.12.1 TDR

The TLK110 uses Time Domain Reflectometry (TDR) to determine the quality of the cables, connectors, and terminations in addition to estimating the cable length. Some of the possible problems that can be diagnosed include opens, shorts, cable impedance mismatch, bad connectors, termination mismatches, cross faults, cross shorts and any other discontinuities along the cable.

The TLK110 transmits a test pulse of known amplitude (1V or 2.5V) down each of the two pairs of an attached cable. The transmitted signal continues down the cable and reflects from each cable imperfection, fault, bad connector, and from the end of the cable itself. After the pulse transmission the TLK110 measures the return time and amplitude of all these reflected pulses. This technique enables measuring the distance and magnitude (impedance) of non-terminated cables (open or short), discontinuities (bad connectors), and improperly-terminated cables with ±1m accuracy.

The TLK110 also uses data averaging to reduce noise and improve accuracy. The TLK110 can record up to five reflections within the tested pair. If more than 5 reflections are recorded, the TLK110 saves the first 5 of them. If a cross fault is detected, the TDR saves the first location of the cross fault and up to 4 reflections in the tested channel. The TLK110 TDR can measure cables up to 200m in length.

For all TDR measurements, the transformation between time of arrival and physical distance is done by the external host using minor computations (such as multiplication, addition and lookup tables). The host must know the expected propagation delay of the cable, which depends, among other things, on the cable category (for example, CAT5, CAT5e, or CAT6).

TDR measurement is allowed in the TLK110 in the following scenarios:

- While Link partner is disconnected – cable is unplugged at the other side
- Link partner is connected but remains “quiet” (for example, in power down mode)
- TDR could be automatically activated when the link fails or is dropped by setting bit 8 of register 0x0009 (SWSCR1). The results of the TDR run after the link fails will be saved in the TDR registers. The SW could read these registers at any time to apply post processing on the TDR results. This mode is designed for cases in which the link dropped due to cable disconnections, in which after link failure, the line will be quiet to allow a proper function of the TDR.

3.12.2 ALCD

The TLK110 also supports Active Link Cable Diagnostic (ALCD). The ALCD offers a passive method to estimate the cable length during active link. The ALCD uses passive digital signal processing based on adapted data, thus enabling measurement of cable length with an active link partner.

The ALCD Cable length measurement accuracy is ±5m for the pair used in the Rx path (due to the passive nature of the test, only the receive path is measured).

Copyright © 2011–2014, Texas Instruments Incorporated

4 Interfaces

4.1 Media Independent Interface (MII)

The Media Independent Interface (MII) is a synchronous 4-bit wide nibble data interface that connects the PHY to the MAC in 100B-TX and 10B-T modes. The MII is fully compliant with IEEE802.3-2002 clause 22.

The MII signals are summarized below.

Data signals	TXD [3:0]
	RXD [3:0]
Transmit and receive-valid signals	TX_EN
	RX_DV
Line-status signals	CRS (carrier sense)
	COL (collision)

Figure 4-1 shows the MII-mode signals.

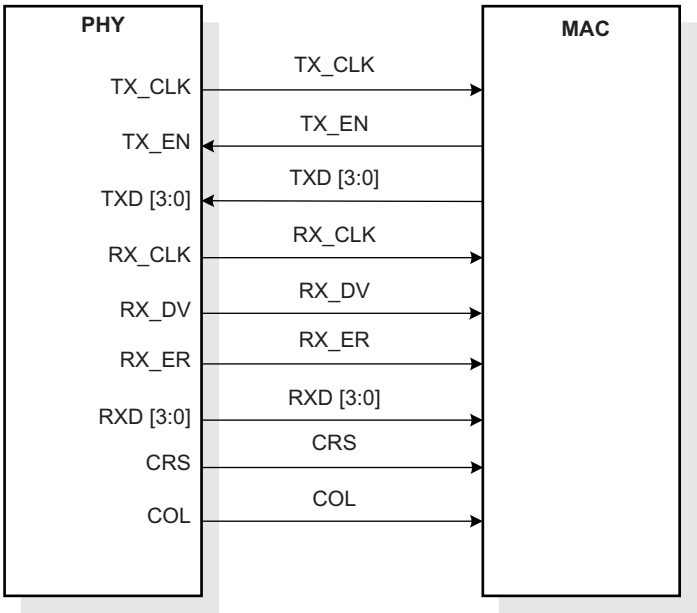

Figure 4-1. MII Signaling

The Isolate bit (BMCR register bit 10), defined in IEEE802.3-2002, electrically isolates the PHY from the MII (if set, all transactions on the MII interface are ignored by the PHY).

Additionally, the MII interface includes the carrier sense signal CRS, as well as a collision detect signal COL. The CRS signal asserts to indicate the reception of data from the network or as a function of transmit data in Half Duplex mode. The COL signal asserts as an indication of a collision which can occur during half-duplex operation when both transmit and receive operation occur simultaneously.

Copyright © 2011–2014, Texas Instruments Incorporated

4.2 Reduced Media Independent Interface (RMII)

TLK110 incorporates the Reduced Media Independent Interface (RMII) as specified in the RMII specification (rev1.2) from the RMII consortium. The purpose of this interface is to provide a low cost alternative to the IEEE 802.3u MII as specified in Clause 22. Architecturally, the RMII specification provides an additional reconciliation layer on either side of the MII, but can be implemented in the absence of an MII.

The RMII specification has the following characteristics:

- Supports 10Mbs and 100Mbs data rates
- Single clock reference sourced from the MAC to PHY (or from an external source)
- Provides independent 2 bit wide (di-bit) transmit and receive data paths
- Uses CMOS signal levels, the same levels as the MII interface

In this mode, data transfers two bits at a time using the 50MHz RMII reference clock for both transmit and receive. RMII mode uses the following pins:

Signal	Pin
XI (RMII reference clock is 50MHz)	34
TXD_0	3
TXD_1	4
TX_EN	2
CRS_DV	40
RX_ER	41
RXD_0	43
RXD_1	44

Data on TXD [1:0] are latched at the PHY with reference to the reference-clock edges on the XI pin. Data on RXD [1:0] are latched at the MAC with reference to the same reference clock edges on the XI pin. The RMII operates at the same speed (50MHz) in both 10B-T and 100B-TX. In 10B-T the data is 10 times slower than the reference clock, so transmit data is sampled every 10 clocks. Likewise, receive data is generated on every 10th clock so that an attached MAC device can sample the data every 10 clocks.

In addition, RMII mode supplies an RX_DV signal which allows a simpler method of recovering receive data without the need to separate RX_DV from the CRS_DV indication. RX_ER is also supported even though not required by RMII spec (The TLK110 supports optional use of RX_ER and RX_DV in RMII as an extra feature). RMII mode requires a 50MHz oscillator connected to the device XI pin.

The TLK110 supports a special mode called “RMII receive clock” mode. This mode, which is not part of the RMII specification, allows synchronization of the MAC-PHY RX interface. In this mode, the PHY generates a recovered 50MHz clock through the RX_CLK pin and synchronizes the RXD[1:0], CRS_DV, RX_DV and RX_ER signals to this clock. Setting register 0x000A bit [0] is required to activate this mode.

Copyright © 2011–2014, Texas Instruments Incorporated

Figure 4-2 describes the RMII signals connectivity between the TLK110 and any MAC device.

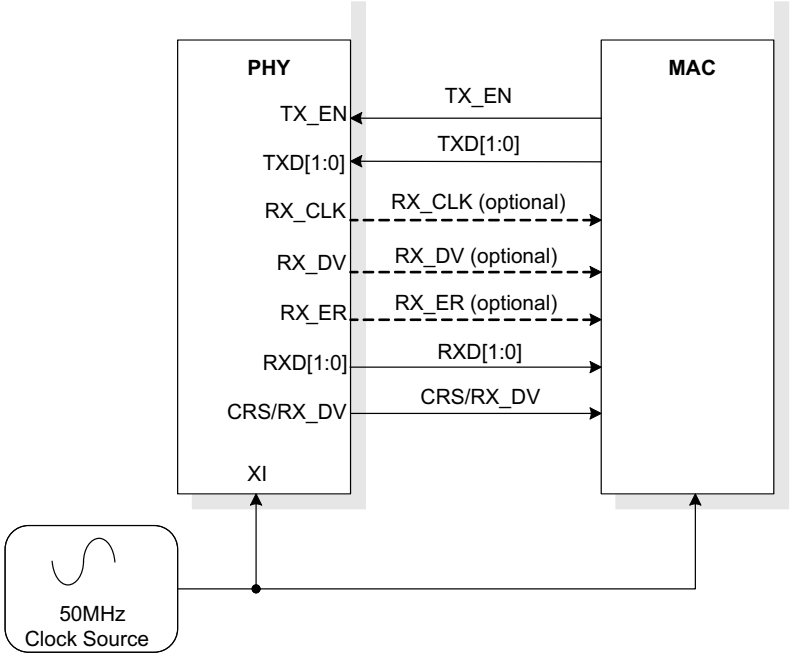

Figure 4-2. TLK110 RMII/MAC Connection

RMII function includes a programmable elastic buffer to adjust for the frequency differences between the reference clock and the recovered receive clock. The programmable elastic buffer minimizes internal propagation delay based on expected maximum packet size and clock accuracy.

Table 4-1 indicates how to program the buffer FIFO based on the expected max packet size and clock accuracy. It assumes that the RMII reference clock and the far-end transmitter clock have the same accuracy.

Table 4-1. Recommended RMII Packet Sizes

Start Threshold RBR[1:0]	Latency Tolerance	Recommended packet size at ±50ppm	Recommended packet size at ±100ppm
1(4-bits)	2 bits	2400 bytes	1200 bytes
2(8-bits)	6 bits	7200 bytes	3600 bytes
3(12-bits)	10 bits	12000 bytes	6000 bytes
0(16-bits)	14 bits	16800 bytes	8400 bytes

4.3 Serial Management Interface

The Serial Management Interface (SMI), provides access to the TLK110 internal register space for status information and configuration. The SMI is compatible with IEEE802.3-2002 clause 22. The implemented register set consists of all the registers required by the IEEE802.3-2002, plus several others to provide additional visibility and controllability of the TLK110 device.

The SMI includes the MDC management clock input and the management MDIO data pin. The MDC clock is sourced by the external management entity, also called Station (STA), and can run at a maximum clock rate of 25MHz. MDC is not expected to be continuous, and can be turned off by the external management entity when the bus is idle.

The MDIO is sourced by the external management entity and by the PHY. The data on the MDIO pin is latched on the rising edge of the MDC clock. The MDIO pin requires a pull-up resistor (2.2kΩ) which, during IDLE and turnaround, pulls MDIO high.

Copyright © 2011–2014, Texas Instruments Incorporated

Up to 32 PHYs can share a common SMI bus. To distinguish between the PHYs, a 5-bit address is used. During power-up reset, the TLK110 latches the PHYAD[4:0] configuration pins (Pin 42 to Pin 46) to determine its address.

The management entity must not start an SMI transaction in the first cycle after power-up reset. To maintain valid operation, the SMI bus must remain inactive at least one MDC cycle after hard reset is de-asserted.

In normal MDIO transactions, the register address is taken directly from the management-frame **reg_addr** field, thus allowing direct access to 32 16-bit registers (including those defined in IEEE802.3 and vendor specific). The data field is used for both reading and writing. The Start code is indicated by a <01> pattern. This pattern makes sure that the MDIO line transitions from the default idle line state. Turnaround is defined as an idle bit time inserted between the Register Address field and the Data field. To avoid contention during a read transaction, no device may actively drive the MDIO signal during the first bit of Turnaround. The addressed TLK110 drives the MDIO with a zero for the second bit of turnaround and follows this with the required data. Figure 4-3 shows the timing relationship between MDC and the MDIO as driven/received by the Station (STA) and the TLK110 (PHY) for a typical register read access.

For write transactions, the station-management entity writes data to the addressed TLK110, thus eliminating the requirement for MDIO Turnaround. The Turnaround time is filled by the management entity by inserting <10>. Figure 4-4 shows the timing relationship for a typical MII register write access. The frame structure and general read/write transactions are shown in Table 4-2, Figure 4-3, and Figure 4-4.

Table 4-2. Typical MDIO Frame Format

MII Management Serial Protocol	<idle><start><op code><device addr><reg addr><turnaround><data><idle>
Read Operation	<idle><01><10><AAAAA><RRRRR><Z0><xxxx xxxx xxxx xxxx><idle>
Write Operation	<idle><01><01><AAAAA><RRRRR><10><xxxx xxxx xxxx xxxx><idle>

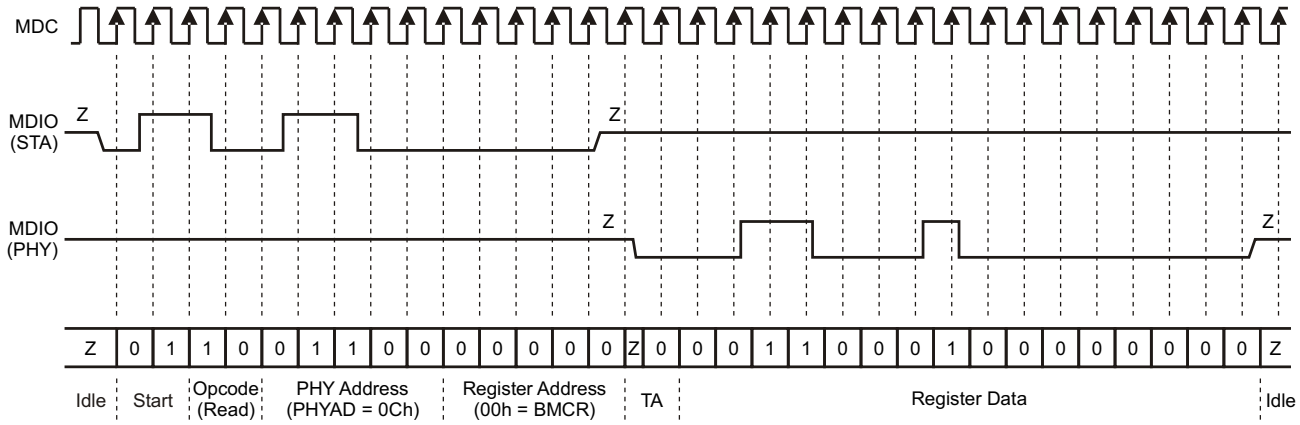

Figure 4-3. Typical MDC/MDIO Read Operation

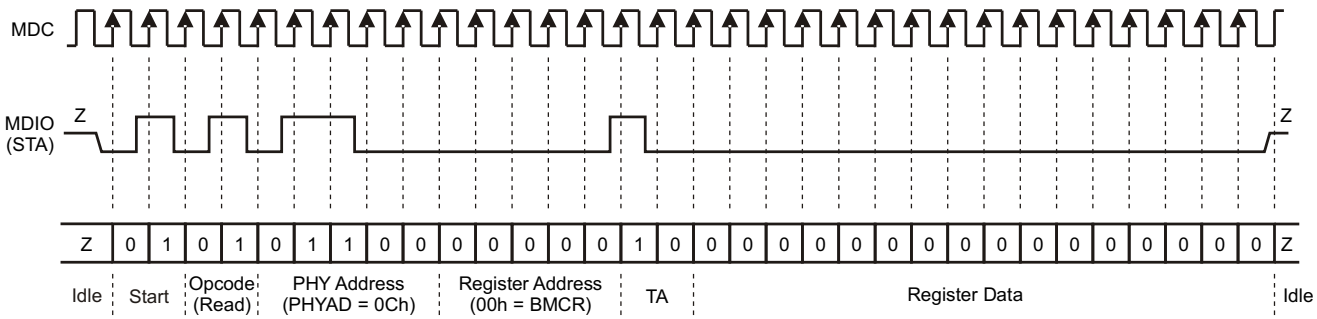

Figure 4-4. Typical MDC/MDIO Write Operation

Copyright © 2011–2014, Texas Instruments Incorporated

4.3.1 Extended Address Space Access

The TLK110 SMI function supports read/write access to the extended register set using registers REGCR(0x000Dh) and ADDAR(0x000Eh) and the MDIO Manageable Device (MMD) indirect method defined in IEEE802.3ah Draft for clause 22 for accessing the clause 45 extended register set.

The standard register set, MDIO registers 0 to 31, is accessed using the normal direct-MDIO access or the indirect method, except for register REGCR(0x000Dh) and ADDAR(0x000Eh) which is accessed only using the normal MDIO transaction. The SMI function will ignore indirect accesses to these registers.

REGCR(0x000Dh) is the MDIO Manageable MMD access control. In general, register REGCR(4:0) is the device address DEVAD that directs any accesses of ADDAR(0x000Eh) register to the appropriate MMD. Specifically, the TLK110 uses the vendor-specific **DEVAD[4:0] = "11111"** for accesses. All accesses through registers REGCR and ADDAR must use this DEVAD. Transactions with other DEVAD are ignored. REGCR[15:14] holds the access function: address (00), data with no post increment (01), data with post increment on read and writes (10) and data with post increment on writes only (11).

- ADDAR is the address/data MMD register. ADDAR is used in conjunction with REGCR to provide the access to the extended register set. If register REGCR[15:1] is 00, then ADDAR holds the address of the extended address space register. Otherwise, ADDAR holds the data as indicated by the contents of its address register. When REGCR[15:14] is set to 00, accesses to register ADDAR modify the extended register set address register. This address register must always be initialized in order to access any of the registers within the extended register set.
- When REGCR[15:14] is set to 01, accesses to register ADDAR access the register within the extended register set selected by the value in the address register.
- When REGCR[15:14] is set to 10, access to register ADDAR access the register within the extended register set selected by the value in the address register. After that access is complete, for both reads and writes, the value in the address register is incremented.
- When REGCR[15:14] is set to 11, access to register ADDAR access the register within the extended register set selected by the value in the address register. After that access is complete, for write accesses only, the value in the address register is incremented. For read accesses, the value of the address register remains unchanged.

The following sections describe how to perform operations on the extended register set using register REGCR and ADDAR.

4.3.1.1 Write Address Operation

To set the address register:

1. Write the value 0x001F (address function field = 00, DEVAD = 31) to register REGCR.
2. Write the desired register address to register ADDAR.

Subsequent writes to register ADDAR (step 2) continue to write the address register.

4.3.1.2 Read Address Operation

To read the address register:

1. Write the value 0x001F (address function field = 00, DEVAD = 31) to register REGCR.
2. Read the register address from register ADDAR.

Subsequent reads to register ADDAR (step 2) continue to read the address register.

4.3.1.3 Write (no post increment) Operation

To write a register in the extended register set:

1. Write the value 0x001F (address function field = 00, DEVAD = 31) to register REGCR.
2. Write the desired register address to register ADDAR.
3. Write the value 0x401F (data, no post increment function field = 01, DEVAD = 31) to register REGCR.
4. Write the content of the desired extended register set register to register ADDAR.

Subsequent writes to register ADDAR (step 4) continue to rewrite the register selected by the value in the address register.

Note: steps (1) and (2) can be skipped if the address register was previously configured.

4.3.1.4 Read (no post increment) Operation

To read a register in the extended register set:

1. Write the value 0x001F (address function field = 00, DEVAD = 31) to register REGCR.
2. Write the desired register address to register ADDAR.
3. Write the value 0x401F (data, no post increment function field = 01, DEVAD = 31) to register REGCR.
4. Read the content of the desired extended register set register to register ADDAR.

Subsequent reads from register ADDAR (step 4) continue reading the register selected by the value in the address register.

Note: steps (1) and (2) can be skipped if the address register was previously configured.

4.3.1.5 Write (post increment) Operation

1. Write the value 0x001F (address function field = 00, DEVAD = 31) to register REGCR.
2. Write the register address from register ADDAR.
3. Write the value 0x801F (data, post increment on reads and writes function field = 10, DEVAD = 31) or the value 0xC01F (data, post increment on writes function field = 11. DEVAD = 31) to register REGCR.
4. Write the content of the desired extended register set register to register ADDAR.

Subsequent writes to register ADDAR (step 4) write the next higher addressed data register selected by the value of the address register; the address register is incremented after each access.

4.3.1.6 Read (post increment) Operation

To read a register in the extended register set and automatically increment the address register to the next higher value following the write operation:

1. Write the value 0x001F (address function field = 00, DEVAD = 31) to register REGCR.
2. Write the desired register address to register ADDAR.
3. Write the value 0x801F (data, post increment on reads and writes function field = 10, DEVAD = 31) to register REGCR.
4. Read the content of the desired extended register set register to register ADDAR.

Subsequent reads to register ADDAR (step 4) read the next higher addressed data register selected by the value of the address register; the address register is incremented after each access.

Copyright © 2011–2014, Texas Instruments Incorporated

5 Architecture

The TLK110 Fast Ethernet transceiver is a physical layer core for Ethernet 100Base-TX and 10Base-T applications. The TLK110 contains all the active circuitry required to implement the physical layer functions to transmit and receive data on standard CAT 3 and 5 unshielded twisted pair. The core supports the IEEE 802.3 Standard Fast Media Independent Interface (MII), as well as the Reduced Media Independent Interface (RMII), for direct connection to a MAC/Switch port.

The TLK110 uses mixed signal processing to perform equalization, data recovery and error correction to achieve robust and low power operation over the existing CAT 5 twisted pair wiring. The TLK110 architecture not only meets the requirements of IEEE802.3, but maintains a high level of margin over the IEEE requirements for NEXT, Alien and External noise.

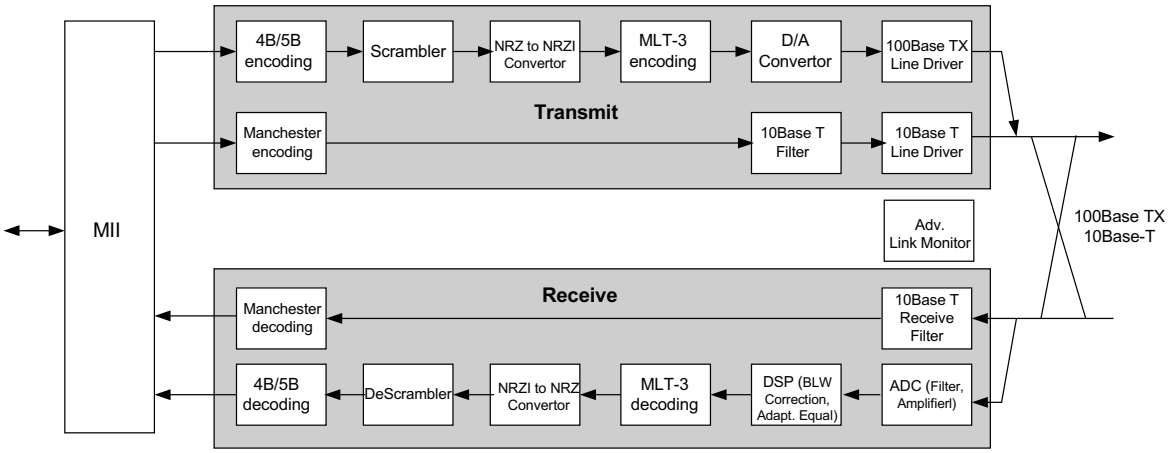

Figure 5-1. PHY Architecture

5.1 100Base-TX Transmit Path

In 100Base-TX, the MAC feeds the 100Mbps transmit data in 4-bit wide nibbles through the MII interface. The data is encoded into 5-bit code groups, encapsulated with control code symbols and serialized. The control-code symbols indicate the start and end of the frame and code other information such as transmit errors. When no data is available from the MAC, IDLE symbols are constantly transmitted. The serialized bit stream is fed into a scrambler. The scrambled data stream passes through an NRZI encoder and then through an MLT3 encoder. Finally, it is fed to the DAC and transmitted through one of the twisted pairs of the cable.

5.1.1 MII Transmit Error Code Forwarding

According to IEEE 802.3:

> "If TX_EN is de-asserted on an odd nibble boundary, PHY should extend TX_EN by one TX_CLK cycle and behave as if TX_ER were asserted during that cycle".

The TLK110 supports Error Forwarding in MII transmission from the MAC to the PHY. Error forwarding allows adding information to the frame to be used as an error code between the 2 MACs. The error code informs the receiving MAC on the link partner side of the reason for the error from the transmitting side. If the MAC transmits an odd number of nibbles, an additional error nibble is added to the transmitted frame just before the end of the transmission.

To turn off Transmit Error Forwarding, write to bit 1 of register SWSCR2 (0x000A). If Error Forwarding is disabled, delivered packets contain either odd or even numbers of nibbles.

In Figure 5-2, Error Code Forwarding functionality is illustrated. The wave diagram demonstrates MAC's transmitted signals in one side and MAC's reception signals on link partner side.

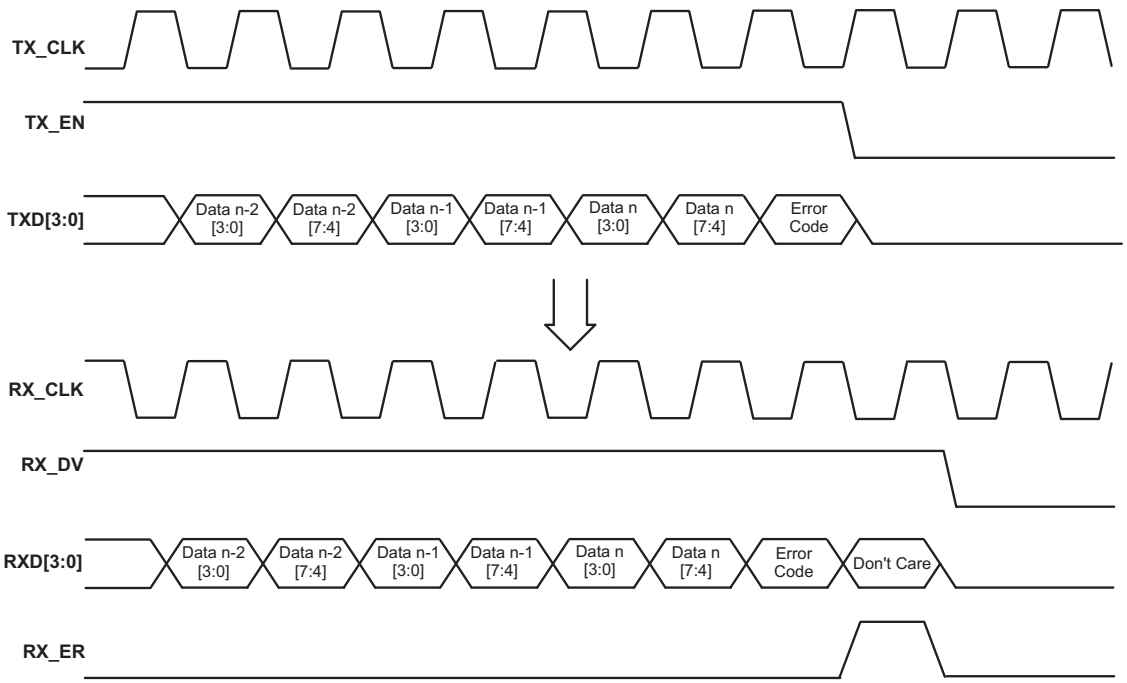

Figure 5-2. Transmit Code Error Forwarding Diagram

5.1.2 4-Bit to 5-Bit Encoding

The transmit data that is received from the MAC first passes through the 4-Bit to 5-Bit encoder. This block encodes 4-bit nibble into 5-bit code-groups according to the Table 5-1. Each 4-bit data nibble is mapped to 16 of the 32 possible code-groups. The remaining 16 code-groups are either used for control information or they are considered as not valid.

The code-group encoder substitutes the first 8-bits of the MAC preamble with a J/K code-group pair (11000 10001) upon transmission. The code-group encoder continues to replace subsequent 4-bit preamble and data nibbles with corresponding 5-bit code-groups. At the end of the transmit packet, upon the de-assertion of Transmit Enable signal from the MAC, the code-group encoder adds the T/R code-group pair (01101 00111) indicating the end of the frame.

After the T/R code-group pair, the code-group encoder continuously adds IDLEs into the transmit data stream until the next transmit packet is detected.

Copyright © 2011–2014, Texas Instruments Incorporated

Table 5-1. 4-Bit to 5-Bit Code Table

4-Bit Code	Symbol	5-Bit Code	Receiver Interpretation
0000	0	11110	Data
0001	1	01001	
0010	2	10100	
0011	3	10101	
0100	4	01010	
0101	5	01011	
0110	6	01110	
0111	7	01111	
1000	8	10010	
1001	9	10011	
1010	A	10110	
1011	B	10111	
1100	C	11010	
1101	D	11011	
1110	E	11100	
1111	F	11101	
IDLE AND CONTROL CODES			
DESCRIPTION	**Symbol (1)**	**5-Bit Code**	
Inter-Packet IDLE	I	11111	IDLE
First nibble of SSD	J	11000	First nibble of SSD, translated to "0101" following /I/ (IDLE), else RX_ER asserted high
Second nibble of SSD	K	10001	Second nibble of SSD, translated to "0101" following /J/, else RX_ER asserted high
First nibble of ESD	T	01101	First nibble of ESD, causes de-assertion of CRS if followed by /R/, else assertion of RX_ER
Second nibble of ESD	R	00111	Second nibble of ESD, causes de-assertion of CRS if following /T/, else assertion of RX_ER
Transmit Error Symbol	H	00100	RX_ER
Invalid Symbol	V	00000	**INVALID** RX_ER asserted high If during RX_DV
	V	00001	
	V	00010	
	V	00011	
	V	00101	
	V	00110	
	V	01000	
	V	01100	

(1) Control code-groups I, J, K, T and R in data fields will be mapped as invalid codes, together with RX_ER asserted.

5.1.3 Scrambler

The purpose of the scrambler is to flatten the power spectrum of the transmitted signal, thus reduce EMI. The scrambler seed is generated with reference to the PHY address so that multiple PHYs that reside within the system will not use the same scrambler sequence.

5.1.4 NRZI and MLT-3 Encoding

To comply with the TP-PMD standard for 100Base-TX transmission over CAT-5 unshielded twisted pair cable, the scrambled data must be NRZI encoded. The serial binary data stream output from the NRZI encoder is further encoded to MLT-3. MLT-3 is a tri-level code where a change in the logic level represents a code bit '1' and the logic output remaining at the same level represents a code bit '0'.

5.1.5 Digital to Analog Converter

The multipurpose programmable transmit Digital to Analog Converter (DAC) receives digital coded symbols and generates filtered analog symbols to be transmitted on the line. In 100B-TX the DAC applies a low-pass shaping filter to minimize EMI. The DAC is designed to improve the return loss requirements and enable the use of low-cost transformers.

Digital pulse-shape filtering is also applied in order to conform to the pulse masks defined by standard and to reduce EMI and high frequency signal harmonics.

5.2 100Base-TX Receive Path

In 100B-TX, the ADC sampled data is passed to an adaptive equalizer. The adaptive equalizer drives the received symbols to the MLT3 decoder. The decoded NRZ symbols are transferred to the descrambler block for descrambling and deserialization.

5.2.1 Analog Front End

The Receiver Analog Front End (AFE) resides in front of the 100B-TX receiver. The AFE consists of an Analog to Digital Converter (ADC), receive filters and a Programmable Gain Amplifier (PGA).

The ADC samples the input signal at the 125MHz clock recovered by the timing loop and feeds the data into the adaptive equalizer. The ADC is designed to optimize the SNR performance at the receiver input while maintaining high power-supply rejection ratio and low power consumption. There is only one ADC in the TLK110, which receives the analog input data from the relevant cable pair, according to MDI-MDIX resolution.

The PGA, digitally controlled by the adaptive equalizer, fully uses the dynamic range of the ADC by adjusting the incoming-signal amplitude. Generally, the PGA attenuates short-cable strong signals and amplifies long-cable weak signals.

5.2.2 Adaptive Equalizer

The adaptive equalizer removes Inter-Symbol Interference (ISI) from the received signal introduced by the channel and analog Tx/Rx filters. The TLK110 includes both Feed Forward Equalization (FFE) and Decision Feedback Equalization (DFE). The combination of both adaptive modules with the adaptive gain control results in a powerful equalizer that can eliminate ISI and compensate for cable attenuation for longer-reach cables. In addition, the Equalizer includes a Shift Gear Step mechanism to provide fast convergence on the one hand and small residual-adaptive noise in steady state on the other hand.

5.2.3 Baseline Wander Correction

The DC offset of the transmitted signal is shifted down or up based on the polarity of the transmitted data because the MLT-3 data is coupled onto the CAT 5 cable through a transformer that is high-pass in nature. This phenomenon is called Baseline wander. To prevent corruption of the received data because of this phenomenon, the receiver corrects the baseline wander and can receive the ANSI TP-PMD-defined "killer packet" with no bit errors.

5.2.4 NRZI and MLT-3 Decoding

The TLK110 decodes the MLT-3 information from the Digital Adaptive Equalizer block to binary NRZI data. The NRZI-to-NRZ decoder is used to present NRZ-formatted data to the descrambler.

Copyright © 2011–2014, Texas Instruments Incorporated

5.2.5 Descrambler

The descrambler is used to descramble the received NRZ data. The data is further deserialized and the parallelized data is aligned to 5-bit code-groups and mapped into 4-bit nibbles. At initialization, the 100B-TX descrambler uses the IDLE-symbols sequence to lock on the far-end scrambler state. During that time, neither data transmission nor reception is enabled. After the far-end scrambler state is recovered, the descrambler constantly monitors the data and checks whether it still synchronized. If, for any reason, synchronization is lost, the descrambler tries to re-acquire synchronization using the IDLE symbols.

5.2.6 5B/4B Decoder and Nibble Alignment

The code-group decoder functions as a look up table that translates incoming 5-bit code-groups into 4-bit nibbles. The code-group decoder first detects the Start of Stream Delimiter (SSD) /J/K/ code-group pair preceded by IDLE code-groups at the start of a packet. Once the code group alignment is determined, it is stored and used until the next start-of-frame. The decoder replaces the /J/K/ with the MAC preamble. Specifically, the /J/K/ 10-bit code-group pair is replaced by the nibble pair (0101 0101). All subsequent 5-bit code-groups are converted to the corresponding 4-bit nibbles for the duration of the entire packet. This conversion ceases upon the detection of the /T/R/ code-group pair denoting the End-of-Stream Delimiter (ESD) or with the reception of a minimum of two IDLE code-groups.

5.2.7 Timing Loop and Clock Recovery

The receiver must lock on the far-end transmitter clock in order to sample the data at the optimum timing. The timing loop recovers the far-end clock frequency and offset from the received data samples and tracks instantaneous phase drifts caused by timing jitter.

The TLK110 has a robust adaptive-timing loop (Tloop) mechanism that is responsible for tracking the Far-End TX clock and adjusting the AFE sampling point to the incoming signal. The Tloop implements an advanced tracking mechanism that when combined with different available phases, always keeps track of the optimized sampling point for the data, and thus offers a robust RX path,tolerant to both PPM and Jitter. The TLK110 is capable of dealing with PPM and jitter at levels far higher than those defined by the standard.

5.2.8 Phase-Locked Loops (PLL)

In 10B-T the digital phase lock loop (DPLL) function recovers the far-end link-partner clock from the received Manchester signal. The DPLL is able to combat clock jitter of up to ±18ns and frequency drifts of ±500ppm between the local PHY clock and the far-end clock. The DPLL feeds the decoder with a decoded serial bit stream.

The integrated analog Phase-Locked Loop (PLL) provides the clocks to the analog and digital sections of the PHY. The PLL is driven by an external reference clock (sourced at the XI,XO pins with a crystal oscillator, or at XI with an external reference clock).

5.2.9 Link Monitor

The TLK110 implements the link monitor State Machine (SM) as defined by the IEEE 802.3 100Base-TX Standard. In addition, the TLK110 enables several add-ons to the link monitor SM activated by configuration bits. The new add-ons include the recovery state which enables the PHY to attempt recovery in the event of a temporary energy-loss situation before entering the LINK_FAIL state, thus restarting the whole link establishment procedure. This sequence allows significant reduction of the recovery time in scenarios where the link loss is temporal.

In addition, the link monitor SM enables moving to the LINK_DOWN state based on descrambler synchronization failure and not only on Signal_Status indication, which shortens the drop-link down time. These add-ons are supplementary to the IEEE standard and are bypassed by default.

Copyright © 2011–2014, Texas Instruments Incorporated

5.2.10 Signal Detect

The signal detect function of the TLK110 is incorporated to meet the specifications mandated by the ANSIFDDI TP-PMD Standard as well as the IEEE 802.3 100Base-TX Standard for both voltage thresholds and timing parameters.

The energy-detector module provides signal-strength indication in various scenarios. Because it is based on an IIR filter, this robust energy detector has excellent reaction time and reliability. The filter output is compared to predefined thresholds in order to decide the presence or absence of an incoming signal.

The energy detector also implements hysteresis to avoid jittering in signal-detect indication. In addition it has fully-programmable thresholds and listening-time periods, enabling shortening of the reaction time if required.

5.2.11 Bad SSD Detection

A Bad Start of Stream Delimiter (Bad SSD) is any transition from consecutive idle code-groups to non-idle code-groups which is not prefixed by the code-group pair /J/K. If this condition is detected, the TLK110 asserts RX_ER, and presents RXD[3:0] = 1110 to the MII for the cycles that correspond to received 5B code-groups until at least two IDLE code groups are detected. In addition, the FCSCR register (0x14h) is incremented by one for every error in the nibble.

When at least two IDLE code groups are detected, RX_ER and CRS are de-asserted.

5.3 10Base-T Receive Path

In 10B-T, after the far-end clock is recovered, the received Manchester symbols pass to the Manchester decoder. The serial decoded bit stream is aligned to the start of the frame, de-serialized to 4-bit wide nibbles and sent to the MAC through the MII.

5.3.1 10M Receive Input and Squelch

The squelch feature determines when valid data is present on the differential receive inputs. The TLK110 implements a squelch to prevent impulse noise on the receive inputs from being mistaken for a valid signal. Squelch operation is independent of the 10Base-T operating mode. The squelch circuitry employs a combination of amplitude and timing measurements (as specified in the IEEE 802.3 10Base-T standard) to determine the validity of data on the twisted-pair inputs.

The signal at the start of a packet is checked by the squelch, and any pulses not exceeding the squelch level (either positive or negative, depending upon polarity) are rejected. When this first squelch level is exceeded correctly, the opposite squelch level must then be exceeded no earlier than 50ns. Finally, the signal must again exceed the original squelch level no earlier than 50ns to qualify as a valid input waveform, and not be rejected. This checking procedure results in the typical loss of three preamble bits at the beginning of each packet. When the transmitter is operating, five consecutive transitions are checked before indicating that valid data is present. At this time, the squelch circuitry is reset.

5.3.2 Collision Detection

When in Half-Duplex mode, a 10Base-T collision is detected when receive and transmit channels are active simultaneously. Collisions are reported by the COL signal on the MII.

The COL signal remains set for the duration of the collision. If the PHY is receiving when a collision is detected, it is reported immediately (through the COL pin).

5.3.3 Carrier Sense

Carrier Sense (CRS) may be asserted due to receive activity after valid data is detected via the squelch function. For 10Mb/s Half Duplex operation, CRS is asserted during either packet transmission or reception. For 10Mb/s Full Duplex operation, CRS is asserted only during receive activity.

CRS is de-asserted following an end-of-packet.

Copyright © 2011–2014, Texas Instruments Incorporated

5.3.4 Jabber Function

Jabber is a condition in which a station transmits for a period of time longer than the maximum permissible packet length, usually due to a fault condition. The jabber function monitors the TLK110 output and disables the transmitter if it attempts to transmit a packet of longer than legal size. A jabber timer monitors the transmitter and disables the transmission if the transmitter is active for approximately 100ms.

When disabled by the Jabber function, the transmitter stays disabled for the entire time that the ENDEC module's internal transmit enable is asserted. This signal must be de-asserted for approximately 500ms (the *unjab* time) before the Jabber function re-enables the transmit outputs.

The Jabber function is only available and active in 10Base-T mode.

5.3.5 Automatic Link Polarity Detection and Correction

Swapping the wires within the twisted pair causes polarity errors. Wrong polarity affects the 10B-T PHYs. The 100B-TX is immune to polarity problems because it uses MLT3 encoding. The 10B-T automatically detects reversed polarity according to the received link pulses or data.

5.3.6 10Base-T Transmit and Receive Filtering

External 10Base-T filters are not required when using the TLK110, because the required signal conditioning is integrated into the device. Only isolation transformers and impedance matching resistors are required for the 10Base-T transmit and receive interface. The internal transmit filtering ensures that all the harmonics in the transmit signal are attenuated by at least 30dB.

5.3.7 10Base-T Operational Modes

The TLK110 has two basic 10Base-T operational modes:

- Half Duplex mode – In Half Duplex mode the TLK110 functions as a standard IEEE 802.3 10Base-T transceiver supporting the CSMA/CD protocol.
- Full Duplex mode – In Full Duplex mode the TLK110 is capable of simultaneously transmitting and receiving without asserting the collision signal. The TLK110 10Mbs ENDEC is designed to encode and decode simultaneously.

5.4 Auto Negotiation

The auto-negotiation function, described in detail in IEEE802.3 chapter 28, provides the means to exchange information between two devices and automatically configure both of them to take maximum advantage of their abilities.

5.4.1 Operation

Auto negotiation uses the 10B-T link pulses to encapsulate the transmitted data in a sequence of pulses, also referred to as a Fast Link Pulses (FLP) burst. The FLP Burst consists of a series of closely spaced 10B-T link integrity test pulses that form an alternating clock/data sequence. Extraction of the data bits from the FLP Burst yields a Link Code Word that identifies the operational modes supported by the remote device, as well as some information used for the auto negotiation function's handshake mechanism.

The information exchanged between the devices during the auto-negotiation process consists of the devices' abilities such as duplex support and speed. This information allows higher levels of the network (MAC) to send to the other link partner vendor-specific data (via the Next Page mechanism, see below), and provides the mechanism for both parties to agree on the highest performance mode of operation.

Copyright © 2011–2014, Texas Instruments Incorporated

When auto negotiation has started, the TLK110 transmits FLP on one twisted pair and listens on the other, thus trying to find out whether the other link partner supports the auto negotiation function as well. The decision on what pair to transmit/listen depends on the MDI/MDI-X state. If the other link partner activates auto negotiation, then the two parties begin to exchange their information. If the other link partner is a legacy PHY or does not activate the auto negotiation, then the TLK110 uses the parallel detection function, as described in IEEE802.3 chapters 40 and 28, to determine 10B-T or 100B-TX operation modes.

5.4.2 Initialization and Restart

The TLK110 initiates the auto negotiation function if it is enabled through the configuration jumper options AN_EN, AN_1 and AN_0 (pins 34,35,36) and one of the following events have happened:

1. Hardware reset de-assertion
2. Software reset (via register)
3. Auto negotiation restart (via register BMCR (0x0000h) bit 9)
4. Power-up sequence (via register BMCR (0x0000h) bit 11)

The auto-negotiation function is also initiated when the auto-negotiation enable bit is set in register BMCR (0x0000h) bit 12 and one of the following events has happened:

1. Software restart
2. Transitioning to *link_fail* state, as described in IEEE802.3

To disable the auto-negotiation function during operation, clear register BMCR (0x0000h) bit 12. During operation, setting/resetting this register does not affect the TLK110 operation. For the changes to take place, issue a restart command through register BMCR (0x0000h) bit 9.

5.4.3 Configuration Bits

The auto-negotiation options can be configured through the configuration bits AN_EN, AN_1 and AN_0 as described in Table 5-2. The configuration bits allow the user to disable/enable the auto negotiation, and select the desirable advertisement features.

During hardware/software reset, the values of these configuration bits are latched into the auto-negotiation registers and available for user read and modification.

Table 5-2. Auto-Negotiation Modes

AN_EN	AN_1	AN_0	Forced Mode
0	0	0	10Base-T, Half-Duplex
0	0	1	10Base-T, Full-Duplex
0	1	0	100Base-TX, Half-Duplex
0	1	1	100Base-TX, Full-Duplex
AN_EN	**AN_1**	**AN_0**	**Advertised Mode**
1	0	0	10Base-T, Half or Full-Duplex
1	0	1	100Base-TX, Half or Full-Duplex
1	1	0	10Base-T,Half-Duplex 100Base-TX, Half-Duplex
1	1	1	10Base-T,Half or Full-Duplex 100Base-TX, Half or Full-Duplex

Copyright © 2011–2014, Texas Instruments Incorporated

5.4.4 Next Page Support

The TLK110 supports the optional feature of the transmission and reception of auto-negotiation additional (vendor specific) next pages.

If next pages are needed, the user must set register ANAR(0x0004h) bit 15 to '1'. The next pages are then sent and received through registers ANNPTR(0x0007h) and ANLNPTR(0x0008h), respectively. The user must poll register ANER(0x0006h) bit 1 to check whether a new page has been received, and then read register ANLNPTR for the received next page's content. Only after register ANLNPTR is read may the user write to register ANNPTR the next page to be transmitted. After register ANNPTR is written, new next pages overwrite the contents of register ANLNPTR.

If register ANAR(0x0004h) bit 15 is set, then the next page sequence is controlled by the user, meaning that the auto-negotiation function always waits for register ANNPTR to be written before transmitting the next page.

If additional user-defined next pages are transmitted and the link partner has more next pages to send, it is the user's responsibility to keep writing null pages (of value 0x2001) to register ANNPTR until the link partner notifies that it has sent its last page (by setting bit 15 of its transmitted next page to zero).

5.5 Link Down Functionality

The TLK110 includes advanced link-down capabilities that support various real-time applications. The link-down mechanism of the TLK110 is configurable and includes enhanced modes that allow extremely fast reaction times to link-drops.

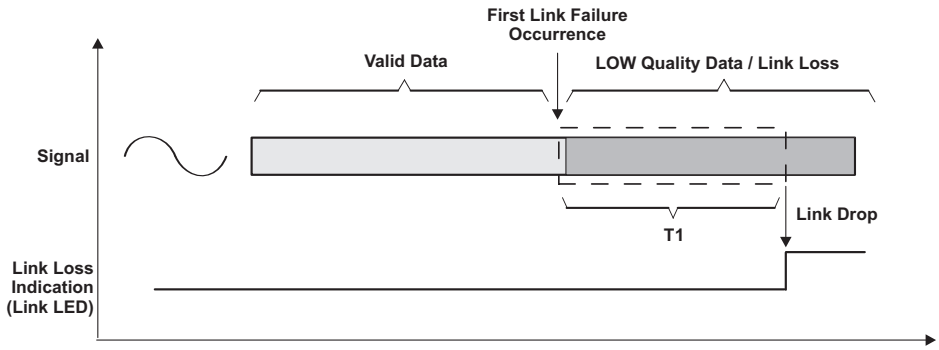

Figure 5-3. TLK110 Link Loss Mechanism

As described in Figure 5-3, the TLK110 link loss mechanism is based on a time window search period, in which the signal behavior is monitored. The T1 window is set by default to reduce typical link-drops to less than 1ms.

The TLK110 supports enhanced modes that shorten the window called Fast Link Down mode. In this mode, which can be configured in Software Strap Control Register 3 (SWSCR3), address 0x000B, bits 3:0, the T1 window is shortened significantly, in most cases less than 10µs. In this period of time there are several criteria allowed to generate link loss event and drop the link:

1. Count RX Error in the MII interface: When a predefined number of 32 RX Error occurrences in time window of 10µs is reached the link will drop.
2. Count MLT3 Errors at the signal processing output (100BT uses MLT3 coding, and when a violation of this coding is detected, an MLT3 error is declared). When a predefined number of 20 errors occurrences in 10µs is reached the link will drop.
3. Count Low Signal Quality Threshold crossing (When the signal quality is under a certain threshold that allows proper link conditions). When a predefined number of 20 occurrences in 10µs is reached, the link will drop.
4. Signal/Energy loss indications. When Energy detector indicates Energy Loss, the link will be dropped. Typical reaction time is 10µs.

Copyright © 2011–2014, Texas Instruments Incorporated

The Fast Link Down functionality allows the use of each of these options separately or in any combination. Note that since this mode enables extremely quick reaction time, it is more exposed to temporary bad link-quality scenarios.

Copyright © 2011–2014, Texas Instruments Incorporated

6 Reset and Power Down Operation

The TLK110 includes an internal power-on-reset (POR) function, and therefore does not need an explicit reset for normal operation after power up.

At power-up, if required by the system, the $\overline{\text{RESET}}$ pin (active low) should be de-asserted 200µs after the power is ramped up to allow the internal circuits to settle and for the internal regulators to stabilize. If required during normal operation, the device can be reset by a hardware or software reset.

6.1 Hardware Reset

A hardware reset is accomplished by applying a low pulse (TTL level), with a duration of at least 1µs, to $\overline{\text{RESET}}$. This pulse resets the device such that all registers are reinitialized to default values, and the hardware configuration values are re-latched into the device (similar to the power-up/reset operation). The time from the point when the reset pin is de-asserted to the point when the reset has concluded internally is approximately 200µs.

6.2 Software Reset

An **IEEE registers software reset** is accomplished by setting the reset bit (bit 15) of the BMCR register (0x0000h). This bit only resets the IEEE-defined standard registers in the address space 0x00h to 0x07h.

A **global software reset** is accomplished by setting bit 15 of register PHYRCR (0x001F) to ‘1’. This bit resets all the internal circuits in the PHY including IEEE-defined registers (0x00h to 0x07h) and all the extended registers. The global software reset resets the device such that all registers are reset to default values and the hardware configuration values are maintained.

A **global software *restart*** is accomplished by setting bit 14 of register PHYRCR (0x001F) to ‘1’. This action resets all the PHY circuits except the registers in the Register File.

The time from the point when the resets/restart bits are set to the point when the software resets/restart has concluded is approximately 200µs. TI recommends that the software driver code must wait 500µs following software reset before allowing further serial MII operations with the TLK110.

6.3 Power Down/Interrupt

The Power Down and Interrupt functions are multiplexed on pin 7 of the device. By default, this pin functions as a power down input and the interrupt function is disabled. This pin can be configured as an interrupt output pin by setting bit 0 (INT_OE) to ‘1’ in the PHYSCR (0x0011h) register. The PHYSCR register is also used to enable and set the polarity of the interrupt.

6.3.1 Power Down Control Mode

The $\overline{\text{INT}}/\overline{\text{PWDN}}$ pin can be asserted low to put the device in a Power Down mode. An external control signal can be used to drive the pin low, overcoming the weak internal pull-up resistor. Alternatively, the device can be configured to initialize into a Power Down state by use of an external pulldown resistor on the $\overline{\text{INT}}/\overline{\text{PWDN}}$ pin.

6.3.2 Interrupt Mechanisms

The interrupt function is controlled via register access. All interrupt sources are disabled by default. The MISR1 (0x0012) and MISR2 (0x0013) registers provide independent interrupt enable bits for the various interrupts supported by the TLK110. The $\overline{\text{INT}}/\overline{\text{PWDN}}$ pin is asynchronously asserted low when an interrupt condition occurs. The source of the interrupt can be determined by reading the interrupt status registers MISR1 (0x0012h) and MISR2 (0x0013). One or more bits in the MISR registers will be set, indicating all currently-pending interrupts. Reading the MISR registers clears ALL pending interrupts.

Copyright © 2011–2014, Texas Instruments Incorporated

6.4 Power Save Modes

The TLK110 supports three types of power-save modes. The lowest power consumption is achieved in IEEE power down mode. To enter IEEE power down mode, pull the $\overline{INT}/\overline{PWDN}$ pin to LOW or program bit 11 in the Basic Mode Control Register (BMCR), address 0x0000. In this mode all internal circuitry except SMI functionality is shut down (Register access is still available).

To enable and activate all other power save modes through register access, use register PHYSCR (0x0011h). Setting bit 14 enables all power-save modes; bits [13:12] select between them.

Setting bits [13:12] to “01” powers down the PHY, forcing it into IEEE power down mode (Similar to BMCR bit 11 functionality).

Setting bits [13:12] to “10” puts the PHY in Low Power Active WOL (Wake-On-LAN) mode.

Setting bits [13:12] to “11” puts the PHY in Low Power Passive WOL (Wake-On-LAN) mode.

When these bits are cleared, the PHY powers up and returns to the last state it was in before it was powered down.

 Copyright © 2011–2014, Texas Instruments Incorporated

7 Design Guidelines

7.1 TPI Network Circuit

Figure 7-1 shows the recommended circuit for a 10/100Mbs twisted pair interface. Below is a partial list of recommended transformers. Variations with PCB and component characteristics require that the application be tested to verify that the circuit meets the requirements of the intended application.

- Pulse H1102
- Pulse HX1198

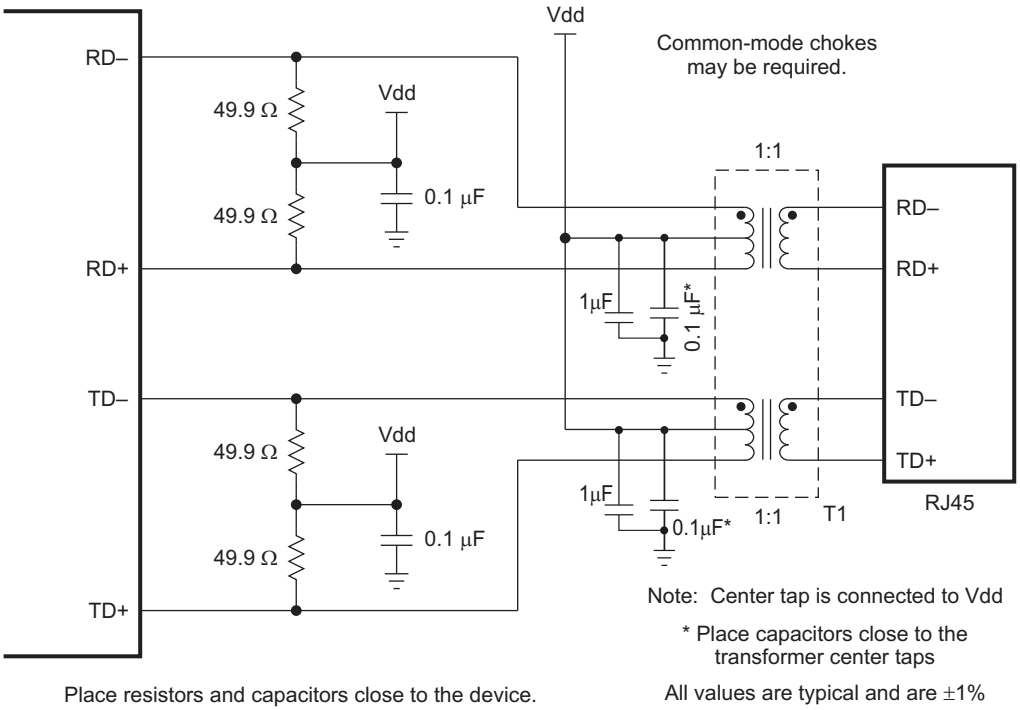

Figure 7-1. 10/100Mbs Twisted Pair Interface

7.2 Clock In (XI) Requirements

The TLK110 supports an external CMOS-level oscillator source or an internal oscillator with an external crystal.

7.2.1 Oscillator

If an external clock source is used, XI should be tied to the clock source and XO should be left floating. The amplitude of the oscillator should be a nominal voltage of 3.3V.

7.2.2 Crystal

The use of a 25MHz, parallel, 20pF-load crystal is recommended if a crystal source is desired. Figure 7-2 shows a typical connection for a crystal resonator circuit. The load capacitor values will vary with the crystal vendors; check with the vendor for the recommended loads.

The oscillator circuit is designed to drive a parallel-resonance AT-cut crystal with a minimum drive level of 100µW and a maximum of 500µW. If a crystal is specified for a lower drive level, a current limiting resistor must be placed in series between XO and the crystal.

As a starting point for evaluating an oscillator circuit, if the requirements for the crystal are not known, set the values for C_{L1} and C_{L2} at 33pF, and R_1 should be set at 0Ω. Specifications for a 25MHz crystal are listed in Table 7-3.

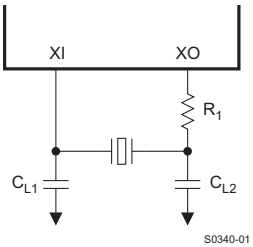

Figure 7-2. Crystal Oscillator Circuit

Table 7-1. 25MHz Oscillator Specification

PARAMETER	TEST CONDITIONS	MIN	TYP	MAX	UNIT
Frequency			25		MHz
Frequency Tolerance	Operational Temperature			±50	ppm
Frequency Stability	1 year aging			±50	ppm
Rise / Fall Time	10%–90%			8	nsec
Jitter (Short term)	Cycle-to-cycle		50		psec
Jitter (Long term)	Accumulative over 10 ms			1	nsec
Symmetry	Duty Cycle	40%		60%	
Load Capacitance			15	30	pF

Table 7-2. 50MHz Oscillator Specification

PARAMETER	TEST CONDITIONS	MIN	TYP	MAX	UNIT
Frequency			50		MHz
Frequency Tolerance	Operational Temperature			±50	ppm
Frequency Stability	1 year aging			±50	ppm
Rise / Fall Time	10%–90%			6	nsec
Jitter (Short term)	Cycle-to-cycle		50		psec
Jitter (Long term)	Accumulative over 10 ms			1	nsec
Symmetry	Duty Cycle	40%		60%	

Table 7-3. 25MHz Crystal Specification

PARAMETER	TEST CONDITIONS	MIN	TYP	MAX	UNIT
Frequency			25		MHz
Frequency Tolerance	Operational Temperature			±50	ppm
	At 25°C			±50	ppm
Frequency Stability	1 year aging			±5	ppm
Load Capacitance		10		40	pF

Copyright © 2011–2014, Texas Instruments Incorporated

8 Register Block

Table 8-1. Register Map

OFFSET HEX	ACCESS	TAG	DESCRIPTION
00h	RW	BMCR	Basic Mode Control Register
01h	RO	BMSR	Basic Mode Status Register
02h	RO	PHYIDR1	PHY Identifier Register 1
03h	RO	PHYIDR2	PHY Identifier Register 2
04h	RW	ANAR	Auto-Negotiation Advertisement Register
05h	RO	ANLPAR	Auto-Negotiation Link Partner Ability Register
06h	RO	ANER	Auto-Negotiation Expansion Register
07h	RW	ANNPTR	Auto-Negotiation Next Page TX
08h	RO	ANLNPTR	Auto-Negotiation Link Partner Ability Next Page Register
09h	RW	SWSCR1	Software Strap Control Register 1
0Ah	RW	SWSCR2	Software Strap Control Register 2
0Bh	RW	SWSCR3	Software Strap Control Register 3
0Ch	RW	RESERVED	RESERVED
0Dh	RW	REGCR	Register control register
0Eh	RW	ADDAR	Address or Data register
0Fh	RW	RESERVED	RESERVED
0x0010	RO	PHYSTS	PHY Status Register
0x0011	RW	PHYSCR	PHY Specific Control Register
0x0012	RW	MISR1	MII Interrupt Status Register 1
0x0013	RW	MISR2	MII Interrupt Status Register 2
0x0014	RO	FCSCR	False Carrier Sense Counter Register
0x0015	RO	RECR	Receive Error Count Register
0x0016	RW	BISCR	BIST Control Register
0x0017	RO	RBR	RMII and Status Register
0x0018	RW	LEDCR	LED Control Register
0x0019	RW	PHYCR	PHY Control Register
0x001A	RW	10BTSCR	10Base-T Status/Control Register
0x001B	RW	BICSR1	BIST Control and Status Register 1
0x001C	RO	BICSR2	BIST Control and Status Register 2
0x001D	RW	RESERVED	RESERVED
0x001E	RW	CDCR	Cable Diagnostic Control Register
0x001F	RW	PHYRCR	PHY Reset Control Register
EXTENDED REGISTERS			
0x0020- 0x0041	RW	RESERVED	RESERVED
0x0042	RO	TXCPSR	TX_CLK Phase Shift Register
0x0043- 0x00AD	RW	RESERVED	RESERVED
0x00AE	RW	PWRBOCR	Power Back Off Control Register
0x00AF- 0x00CF	RW	RESERVED	RESERVED
0x00D0	RW	VRCR	Voltage Regulator Control Register
0x00D1-0x0154	RW	RESERVED	RESERVED
0x0155	RW	ALCDRR1	ALCD Control and Results 1
0x0156- 0x016F	RW	RESERVED	RESERVED
0x0170	RW	CDSCR1	Cable Diagnostic Specific Control Register 1
0x0171	RW	CDSCR2	Cable Diagnostic Specific Control Register 2
0x0172	RW	RESERVED	RESERVED

Copyright © 2011–2014, Texas Instruments Incorporated

Table 8-1. Register Map (continued)

OFFSET HEX	ACCESS	TAG	DESCRIPTION
0x0173	RW	CDSCR3	Cable Diagnostic Specific Control Register 3
0x0174-0x0176	RW	RESERVED	RESERVED
0x0177	RW	CDSCR4	Cable Diagnostic Specific Control Register 4
0x0178- 0x017F	RW	RESERVED	RESERVED
0x0180	RO	CDLRR1	Cable Diagnostic Location Result Register 1
0x0181	RO	CDLRR2	Cable Diagnostic Location Result Register 2
0x0182	RO	CDLRR3	Cable Diagnostic Location Result Register 3
0x0183	RO	CDLRR4	Cable Diagnostic Location Result Register 4
0x0184	RO	CDLRR5	Cable Diagnostic Location Result Register 5
0x0185	RO	CDLAR1	Cable Diagnostic Amplitude Result Register 1
0x0186	RO	CDLAR2	Cable Diagnostic Amplitude Result Register 2
0x0187	RO	CDLAR3	Cable Diagnostic Amplitude Result Register 3
0x0188	RO	CDLAR4	Cable Diagnostic Amplitude Result Register 4
0x0189	RO	CDLAR5	Cable Diagnostic Amplitude Result Register 5
0x018A	RW	CDGRR	Cable Diagnostic General Result Register
0x018B-0x0214	RW	RESERVED	RESERVED
0x0215	RW	ALCDRR2	ALCD Control and Results 2 Register

Copyright © 2011–2014, Texas Instruments Incorporated

Table 8-2. Register Table

Register Name	Addr	Tag	Bit 15	Bit 14	Bit 13	Bit 12	Bit 11	Bit 10	Bit 9	Bit 8	Bit 7	Bit 6	Bit 5	Bit 4	Bit 3	Bit 2	Bit 1	Bit 0
Basic Mode Control Register	00h	BMCR	Reset	Loopback	Speed Selection	Auto-Neg Enable	IEEE Power Down	Isolate	Restart Auto-Neg	Duplex Mode	Collision Test	Reserved						
Basic Mode Status Register	01h	BMSR	100Base - T4	100Base - TX FDX	100Base - TX HDX	10Base-T FDX	10Base-T HDX	Reserved				MF Preamble Suppress	Auto-Neg Complete	Remote Fault	Auto-Neg Ability	Link Status	Jabber Detect	Extended Capability
PHY Identifier Register 1	02h	PHYIDR 1	OUI MSB															
PHY Identifier Register 2	03h	PHYIDR 2	OUI LSB						VNDR_ MDL						MDL_ REV			
Auto-Negotiation Advertisement Register	04h	ANAR	Next Page Ind	Reserved	Remote Fault	Reserved	ASM_DI R	PAUSE	100B-T4	100B-TX_FD	100B-TX	10B-T_FD	10B-T	Protocol Selection[4:0]				
Auto-Negotiation Link Partner Ability Register (Base Page)	05h	ANLPAR	Next Page Ind	ACK	Remote Fault	Reserved	ASM_DI R	PAUSE	100B-T4	100B-TX_FD	100B-TX	10B-T_FD	10B-T	Protocol Selection[4:0]				
Auto-Negotiation Expansion Register	06h	ANER	Reserved											PDF	LP_NP_ ABLE	NP_ ABLE	PAGE_ RX	LP_AN_AB LE
Auto-Negotiation Next Page TX Register	07h	ANNPTR	Next Page Ind	Reserved	Message Page	ACK2	TOG_TX	CODE										
Auto-Negotiate Link Partner Ability Page Register	08h	ANLNPTR	Next Page Ind	Reserved	Message Page	ACK2	Toggle	CODE										
Software Strap Control Register 1	09h	SWSCR1	Config Done	Auto MDIX Enable	Auto-Neg Enable	AN_1	AN_0	LED_ CFG	RMII Enhance Mode	TDR Auto Run	Link Loss Recovery	Fast Auto MDI/X	Robust Auto MDI/X	Fast AN Enable	Fast AN Select		Fast RXDV Detect	INT OE
Software Strap Control Register 2	0Ah	SWSCR2	Reserved									Fast Link-Up in PD	Extended FD Ability	Enhance LED Link	Isolate MII in 100BT HD	RXERR During IDLE	Odd Nibble Detect Disable	RMII Receive Clock
Software Strap Control Register 3	0Bh	SWSCR3	Reserved									Polarity Swap	MDI/X Swap	Bypass 4B/5B	Fast Link Down Sel			
RESERVED	0Ch	Reserved	Reserved															
Register Control Register	0Dh	REGCR	Function		Reserved									DEVICE ADDRESS				
Address or Data Register	0Eh	ADDAR	Addr/ Data															
RESERVED	0Fh	Reserved	Reserved															
PHY Status Register	10h	PHYSTS	Reserved	MDI-X Mode	Receive Err Latch	Polarity Status	False Carrier Sen Latch	Signal Detect	Descramb Lock	Page Receive	MII Interrupt	Remote Fault	Jabber Detect	Auto-Neg Status	Loopback Status	Duplex Status	Speed Status	Link Status
PHY Specific Control Register	11h	PHYSCR	Disable PLL	Power Save Enable	Power Save Mode		Scrambler Bypass	Reserved	Loopback Fifo Depth		Reserved			COL FD Enable	INT POL	TINT	INT_EN	INT_OE
MII Interrupt Status Register 1	12h	MISR1	Reserved		Link Status INT	Speed INT	Duplex Mode INT	Auto-Neg Comp INT	FC HF INT	RE HF INT	Reserved		Link Status En	Speed EN	Duplex Mode En	Auto-Neg Comp En	FC HF En	RE HF En
MII Interrupt Status Register 2	13h	MISR2	Reserved	Auto-Neg Error INT	Page Received INT	Loopback FIFO O/U INT	MDI Crossover INT	Sleep Mode INT	Polarity INT	Jabber INT	Reserved	Auto-Neg Error EN	Page Received EN	Loopback FIFO O/U EN	MDI Crossover EN	Sleep Mode EN	Polarity EN	Jabber EN
MII Interrupt Control Register	14h	FCSCR	Reserved								FCS Count							

Copyright © 2011–2014, Texas Instruments Incorporated

Table 8-2. Register Table (continued)

Register Name	Addr	Tag	Bit 15	Bit 14	Bit 13	Bit 12	Bit 11	Bit 10	Bit 9	Bit 8	Bit 7	Bit 6	Bit 5	Bit 4	Bit 3	Bit 2	Bit 1	Bit 0
Receive Error Counter Register	15h	RECR	RX Err Count															
BIST Control Register	16h	BISCR	Reserved	PRBS Count Mode	Generate PRBS Packets	Packet Gen Enable	PRBS Checker Lock	PRBS Checker SyncLoss	Packet Gen Status	Power Mode	Reserved	Transmit in MII Loopback	Reserved	Loopback Mode				
RMII Control, Status Register	17h	RCSR	Reserved										RMII Mode	RMII Revision	RMII OVF Status	RMII UNF Status	ELAST BUF	
LED Control Register	18h	LEDCR	Reserved					Blink Rate		LED Speed Polarity	LED Link Polarity	LED Activity Polarity	Drive LED Speed	Drive LED Link	Drive LED Activity	Speed LED ON/OFF	Link LED ON/OFF	Activity LED ON/OFF
PHY Control Register	19h	PHYCR	Auto MDI/X Enable	Force MDI/X	Pause RX Status	Pause TX Status	MI Link Status	Reserved			Bypass LED Stretching	LED CFG		PHY ADDR				
BIST Packet Length register	1Ah	10BTSCR	Reserved		Receiver TH	Squelch				Reserved	NLP Disable	Reserved		Polarity Status	Reserved			Jabber Disable
BIST Control, Status Register 1	1Bh	BICSR1	BIST Err Count								BIST IPG Length							
BIST Control, Status Register 2	1Ch	BICSR2	Reserved					Packet Length										
Cable Diagnostic Control Register	1Eh	CDCR	Diagnostic Start	Reserved					Link Quality	Link Quality	Reserved						Diagnostic Done	Diagnostic Fail
Power Down Register	1Fh	PDR	Software Reset	Software Restart	Reserved													

Copyright © 2011–2014, Texas Instruments Incorporated

Table 8-3. Register Table, Extended Registers

Register Name	Addr	Tag	Bit 15	Bit 14	Bit 13	Bit 12	Bit 11	Bit 10	Bit 9	Bit 8	Bit 7	Bit 6	Bit 5	Bit 4	Bit 3	Bit 2	Bit 1	Bit 0
TX_CLK	42h	TXCPSR	Reserved											Phase Shift En	Phase Shift Value			
Voltage Regulator Control Register	D0h	VRCR	VRPD	Reserved											VR Control			
ALCD Control and Results 1	155h	ALCDRR1	alcd_start	Reserved		alcd_done	alcd_out1								Reserved	alcd_ctrl		
PowerBack Off Control Register	AEh	PWRBOCR	Reserved								PowerBack Off			Reserved				
Cable Diagnostic Specific Control Register 1	170h	CDSCR1	Reserved	Cross Disable	TPTD Bypass	TPRD Bypass	Reserved	Average Cycles			Reserved							
Cable Diagnostic Specific Control Register 2	171h	CDSCR2	Reserved												TDR pulse control			
Cable Diagnostic Specific Control Register 3	173h	CDSCR3	Cable length								Reserved							
Cable Diagnostic Specific Control Register 4	177h	CDSCR4				Short cables TH					Reserved							
Cable Diagnostic Location Results Register 1-5	180h	CDLRR1	TPTD/RD Peak Location															
	181h	CDLRR2																
	182h	CDLRR3																
	183h	CDLRR4																
	184h	CDLRR5																
Cable Diagnostic Amplitude Results Register 1-5	185h	CDLAR1	Reserved	TPTD/RD Peak Amplitude							Reserved	TPTD/RD Peak Amplitude						
	186h	CDLAR2																
	187h	CDLAR3																
	188h	CDLAR4																
	189h	CDLAR5																
Cable Diagnostic General Results Register	18Ah	CDGRR	TPTD Peak Polarity 5	TPTD Peak Polarity 4	TPTD Peak Polarity 3	TPTD Peak Polarity 2	TPTD Peak Polarity 1	TPRD Peak Polarity 5	TPRD Peak Polarity 4	TPRD Peak Polarity 3	TPRD Peak Polarity 2	TPRD Peak Polarity 1	Cross Detect on TPTD	Cross Detect on TPRD	Above 5 TPTD Peaks	Above 5 TPTD Peaks	Reserved	Reserved
ALCD Control and Results 2 Register	215h	ALCDRR2	alcd_out2				alcd_out3											

8.1 Register Definition

In the register definitions under the 'Default' heading, the following definitions hold true:

- COR = Clear on Read
- Pin_Strap = Default value loads from strapping pin after reset
- LH = Latched High and held until read, based upon the occurrence of the corresponding event
- LL = Latched Low and held until read, based upon the occurrence of the corresponding event
- RO = Read Only access
- RO/COR = Read Only, Clear on Read
- RO/P = Read Only, Permanently set to a default value
- RW = Read Write access
- RW/SC = Read Write Access/Self Clearing bit
- SC = Register sets on event occurrence and Self-Clears when event ends
- SWSC_Strap = Default value loads from SWSC strapping bit
- SWS = Software Strap bit: Bit is always accessible. When written during soft strap mode, latches value after applying Config Done; acts as Default during functional mode (until next HW Reset). Otherwise, latches bit content regularly as RW.
- SWSC = Software Strap config - Bit is accessible only at Software strap mode, value of bit is latched after applying Config Done as default to the destination bit. During functional mode the bit is not accessible. The SWSC duplicate external pin strap option, in this case SWSC has higher priority than the pin Configuration. SWSC default value will come from the corresponding pin Configuration

8.1.1 Basic Mode Control Register (BMCR)

Table 8-4. Basic Mode Control Register (BMCR), address 0x0000

BIT	BIT NAME	DEFAULT	DESCRIPTION
15	Reset	0, RW/SC	**PHY Software Reset:** 1 = Initiate software Reset / Reset in Process 0 = Normal operation Writing a 1 to this bit resets the PHY. When the reset operation is done, this bit is cleared to 0 automatically. The configuration is relatched.
14	MII Loopback	0, RW	**MII Loopback:** 1 = MII Loopback enabled 0 = Normal operation When MII loopback mode is activated, the transmitter data presented on MII TXD is looped back to MII RXD internally.
13	Speed Selection	1, Pin_Strap, SWSC_Strap, RW	**Speed Select:** When auto-negotiation is disabled writing to this bit allows the port speed to be selected. 1 = 100Mbs 0 = 10Mbs
12	Auto-Negotiation Enable	1, Pin_Strap, SWSC_Strap, RW	**Auto-Negotiation Enable:** Configuration pin (jumper) controls initial value at reset. 1 = Auto-Negotiation Enabled – bits 8 and 13 of this register are ignored when this bit is set. 0 = Auto-Negotiation Disabled – bits 8 and 13 determine the port speed and duplex mode.

Copyright © 2011–2014, Texas Instruments Incorporated

Table 8-4. Basic Mode Control Register (BMCR), address 0x0000 (continued)

BIT	BIT NAME	DEFAULT	DESCRIPTION
11	IEEE Power Down	0, RW	**Power Down:** 1 = Enables IEEE power down mode 0 = Normal operation Setting this bit powers down the PHY. Only minimal register functionality is enabled during the power down condition. To control the power down mechanism, this bit is ORed with the input from the $\overline{\text{INT}}$/$\overline{\text{PWDN}}$ pin. When the active low $\overline{\text{INT}}$/$\overline{\text{PWDN}}$ is asserted, this bit is set.
10	Isolate	0, RW	**Isolate:** 1 = Isolates the Port from the MII with the exception of the serial management 0 = Normal operation
9	Restart Auto-Negotiation	0, RW/SC	**Restart Auto-Negotiation:** 1 = Restart Auto-Negotiation. Re-initiates the Auto-Negotiation process. If Auto-Negotiation is disabled (bit 12 = 0), this bit is ignored. This bit is self-clearing and will return a value of 1 until Auto-Negotiation is initiated, whereupon it will self-clear. Operation of the Auto-Negotiation process is not affected by the management entity clearing this bit. 0 = Normal operation Re-initiates the Auto-Negotiation process. If Auto-Negotiation is disabled (bit 12 = 0), this bit is ignored. This bit is self-clearing and will return a value of 1 until Auto-Negotiation is initiated, whereupon it self-clears. Operation of the Auto-Negotiation process is not affected by the management entity clearing this bit.
8	Duplex Mode	1, Pin_Strap, SWSC_Strap, RW led control	**Duplex Mode:** When auto-negotiation is disabled writing to this bit allows the port Duplex capability to be selected. 1 = Full Duplex operation 0 = Half Duplex operation
7	Collision Test	0, RW	**Collision Test:** 1 = Collision test enabled 0 = Normal operation When set, this bit causes the COL signal to be asserted in response to the assertion of TX_EN within 512 bit times. The COL signal is de-asserted within 4 bit times in response to the de-assertion of TX_EN.
6:0	RESERVED	0, RO	**RESERVED:** Write ignored, read as 0.

8.1.2 Basic Mode Status Register (BMSR)

Table 8-5. Basic Mode Status Register (BMSR), address 0x0001

BIT	BIT NAME	DEFAULT	DESCRIPTION
15	100Base-T4	0, RO/P	**100Base-T4 Capable:** This protocol is not available. Always 0 = Device does not perform 100Base-T4 mode.
14	100Base-TX Full Duplex	1, RO/P	**100Base-TX Full Duplex Capable:** 1 = Device able to perform 100Base-TX in full duplex mode 0 = Device not able to perform 100Base-TX in full duplex mode
13	100Base-TX Half Duplex	1, RO/P	**100Base-TX Half Duplex Capable:** 1 = Device able to perform 100Base-TX in half duplex mode 0 = Device not able to perform 100Base-TX in half duplex mode
12	10Base-T Full Duplex	1, RO/P	**10Base-T Full Duplex Capable:** 1 = Device able to perform 10Base-T in full duplex mode 0 = Device not able to perform 10Base-T in full duplex mode
11	10Base-T Half Duplex	1, RO/P	**10Base-T Half Duplex Capable:** 1 = Device able to perform 10Base-T in half duplex mode 0 = Device not able to perform 10Base-T in half duplex mode
10:7	RESERVED	0, RO	**RESERVED:** Write as 0, read as 0
6	MF Preamble Suppression	1, RO/P	**Preamble suppression Capable:** 1 = Device able to perform management transaction with preamble suppressed, 32-bits of preamble needed only once after reset, invalid opcode or invalid turnaround. 0 = Device will not perform management transaction with preambles suppressed
5	Auto-Negotiation Complete	0, RO	**Auto-Negotiation Complete:** 1 = Auto-Negotiation process complete 0 = Auto-Negotiation process not complete (either still in process, disabled, or reset)
4	Remote Fault	0, RO/LH	**Remote Fault:** 1 = Remote Fault condition detected (cleared on read or by reset). Fault criteria: Far End Fault Indication or notification from Link Partner of Remote Fault. 0 = No remote fault condition detected
3	Auto-Negotiation Ability	1, RO/P	**Auto Negotiation Ability:** 1 = Device is able to perform Auto-Negotiation 0 = Device is not able to perform Auto-Negotiation
2	Link Status	0, RO/LL	**Link Status:** 1 = Valid link established (for either 10 or 100Mbs operation) 0 = Link not established
1	Jabber Detect	0, RO/LH	**Jabber Detect:** This bit only has meaning in 10Mbs mode. 1 = Jabber condition detected 0 = No Jabber. condition detected This bit is implemented with a latching function, such that the occurrence of a jabber condition causes it to set until it is cleared by a read to this register by the management interface or by a reset.
0	Extended Capability	1, RO/P	**Extended Capability**: 1 = Extended register capabilities 0 = Basic register set capabilities only

Copyright © 2011–2014, Texas Instruments Incorporated

8.1.3 PHY Identifier Register 1 (PHYIDR1)

The PHY Identifier Registers 1 and 2 together form a unique identifier for the TLK110. The identifier consists of a concatenation of the Organizationally Unique Identifier (OUI), the vendor's model number and the model revision number. A PHY may return a value of zero in each of the 32 bits of the PHY Identifier if desired. The PHY Identifier is intended to support network management. The Texas Instruments IEEE-assigned OUI is 080028h, implemented as Reg 0x2 [15:0] = OUI[21:6] = 2000(h) and Reg 0x3 [15:10] = OUI[5:0] = A(h).

Table 8-6. PHY Identifier Register 1 (PHYIDR1), address 0x0002

BIT	BIT NAME	DEFAULT	DESCRIPTION
15:0	OUI_MSB	0010 0000 0000 0000, RO/P	**OUI[21:6] = 2000(h):** The most significant two bits of the OUI are ignored (the IEEE standard refers to these as bits 1 and 2).

8.1.4 PHY Identifier Register 2 (PHYIDR2)

Table 8-7. PHY Identifier Register 2 (PHYIDR2), address 0x0003

BIT	BIT NAME	DEFAULT	DESCRIPTION
15:10	OUI_LSB	1010 00, RO/P	**OUI[5:0] = 28(h)**
9:4	VNDR_MDL	10 0001, RO/P	**Vendor Model Number:** The six bits of vendor model number are mapped from bits 9 to 4 (most significant bit to bit 9).
3:0	MDL_REV	0001, RO/P	**Model Revision Number:** Four bits of the vendor model revision number are mapped from bits 3 to 0 (most significant bit to bit 3). This field is incremented for all major device changes.

8.1.5 Auto-Negotiation Advertisement Register (ANAR)

This register contains the advertised abilities of this device as they are transmitted to its link partner during Auto-Negotiation.

Table 8-8. Auto Negotiation Advertisement Register (ANAR), address 0x0004

BIT	BIT NAME	DEFAULT	DESCRIPTION
15	NP	0, RW	**Next Page Indication:** 0 = Next Page Transfer not desired 1 = Next Page Transfer desired
14	RESERVED	0, RO/P	**RESERVED by IEEE:** Writes ignored, Read as 0
13	RF	0, RW	**Remote Fault:** 1 = Advertises that this device has detected a Remote Fault 0 = No Remote Fault detected
12	RESERVED	0, RW	**RESERVED for Future IEEE use:** Write as 0, Read as 0
11	ASM_DIR	0, RW	**Asymmetric PAUSE Support for Full Duplex Links:** The ASM_DIR bit indicates that asymmetric PAUSE is supported. 1 = Asymmetric PAUSE implemented. Advertise that the DTE/MAC has implemented both the optional MAC control sublayer and the pause function as specified in clause 31 and annex 31B of IEEE802.3u. 0 = Asymmetric PAUSE not implemented Encoding and resolution of PAUSE bits is defined in IEEE 802.3 Annex 28B, Tables 28B-2 and 28B-3, respectively. Pause resolution status is reported in PHYCR[13:12].
10	PAUSE	0, RW	**PAUSE Support for Full Duplex Links:** The PAUSE bit indicates that the device is capable of providing the symmetric PAUSE functions as defined in Annex 31B. 1 = MAC PAUSE implemented. Advertise that the DTE (MAC) has implemented both the optional MAC control sub-layer and the pause function as specified in clause 31 and annex 31B of 802.3u. 0 = MAC PAUSE not implemented Encoding and resolution of PAUSE bits is defined in IEEE 802.3 Annex 28B, Tables 28B-2 and 28B-3, respectively. Pause resolution status is reported in PHYCR[13:12].
9	100B-T4	0, RO/P	**100Base-T4 Support:** 1 = 100Base-T4 is supported by the local device 0 = 100Base-T4 not supported
8	100B-TX_FD	1, Pin_Strap, SWSC_Strap, RW	**100Base-TX Full Duplex Support:** 1 = 100Base-TX Full Duplex is supported by the local device 0 = 100Base-TX Full Duplex not supported
7	100B-TX	1, Pin_Strap, SWSC_Strap, RW	**100Base-TX Support:** 1 = 100Base-TX is supported by the local device 0 = 100Base-TX not supported
6	10B-T_FD	1, Pin_Strap, SWSC_Strap, RW	**10Base-T Full Duplex Support:** 1 = 10Base-T Full Duplex is supported by the local device 0 = 10Base-T Full Duplex not supported
5	10B-T	1, Pin_Strap, SWSC_Strap, RW	**10Base-T Support:** 1 = 10Base-T is supported by the local device 0 = 10Base-T not supported
4:0	Selector	0 0001, RW	**Protocol Selection Bits:** These bits contain the binary encoded protocol selector supported by this port. <00001> indicates that this device supports IEEE 802.3u.

Copyright © 2011–2014, Texas Instruments Incorporated

8.1.6 Auto-Negotiation Link Partner Ability Register (ANLPAR) (BASE Page)

This register contains the advertised abilities of the Link Partner as received during Auto-Negotiation. The content changes after the successful auto-negotiation if Next-pages are supported.

Table 8-9. Auto-Negotiation Link Partner Ability Register (ANLPAR) (BASE Page), address 0x0005

BIT	BIT NAME	DEFAULT	DESCRIPTION
15	NP	0, RO	**Next Page Indication:** 0 = Link Partner does not desire Next Page Transfer 1 = Link Partner desires Next Page Transfer
14	ACK	0, RO	**Acknowledge:** 1 = Link Partner acknowledges reception of the ability data word 0 = Not acknowledged. The Auto-Negotiation state machine will automatically control the this bit based on the incoming FLP bursts.
13	RF	0, RO	**Remote Fault:** 1 = Remote Fault indicated by Link Partner 0 = No Remote Fault indicated by Link Partner
12	RESERVED	0, RO	**RESERVED for Future IEEE use:** Write as 0, read as 0
11	ASM_DIR	0, RO	**ASYMMETRIC PAUSE:** 1 = Asymmetric pause is supported by the Link Partner 0 = Asymmetric pause is not supported by the Link Partner
10	PAUSE	0, RO	**PAUSE:** 1 = Pause function is supported by the Link Partner 0 = Pause function is not supported by the Link Partner
9	100B-T4	0, RO	**100Base-T4 Support:** 1 = 100Base-T4 is supported by the Link Partner 0 = 100Base-T4 is not supported by the Link Partner
8	100B-TX_FD	0, RO	**100Base-TX Full Duplex Support:** 1 = 100Base-TX Full Duplex is supported by the Link Partner 0 = 100Base-TX Full Duplex is not supported by the Link Partner
7	100B-TX	0, RO	**100Base-TX Support:** 1 = 100Base-TX is supported by the Link Partner 0 = 100Base-TX is not supported by the Link Partner
6	10B-T_FD	0, RO	**10Base-T Full Duplex Support:** 1 = 10Base-T Full Duplex is supported by the Link Partner 0 = 10Base-T Full Duplex is not supported by the Link Partner
5	10B-T	0, RO	**10Base-T Support:** 1 = 10Base-T is supported by the Link Partner 0 = 10Base-T is not supported by the Link Partner
4:0	Selector	0 0000, RO	**Protocol Selection Bits:** Link Partner's binary encoded protocol selector.

Copyright © 2011–2014, Texas Instruments Incorporated

8.1.7 Auto-Negotiate Expansion Register (ANER)

This register contains additional Local Device and Link Partner status information.

Table 8-10. Auto-Negotiate Expansion Register (ANER), address 0x0006

BIT	BIT NAME	DEFAULT	DESCRIPTION
15:5	RESERVED	0, RO	**RESERVED:** Writes ignored, Read as 0.
4	PDF	0, RO	**Parallel Detection Fault:** 1 = Fault detected via the Parallel Detection function 0 = No fault detected
3	LP_NP_ABLE	0, RO	**Link Partner Next Page Able:** 1 = Link Partner does support Next Page 0 = Link Partner does not support Next Page
2	NP_ABLE	1, RO/P	**Next Page Able:** 1 = Indicates local device is able to send additional *Next Pages* 0 = Indicates local device is not able to send additional *Next Pages*
1	PAGE_RX	0, RO/COR	**Link Code Word Page Received:** 1 = Link Code Word has been received, cleared on a read 0 = Link Code Word has not been received
0	LP_AN_ABLE	0, RO	**Link Partner Auto-Negotiation Able:** 1 = indicates that the Link Partner supports Auto-Negotiation 0 = indicates that the Link Partner does not support Auto-Negotiation

Copyright © 2011–2014, Texas Instruments Incorporated

8.1.8 Auto-Negotiate Next Page Transmit Register (ANNPTR)

This register contains the next page information sent by this device to its Link Partner during Auto-Negotiation.

Table 8-11. Auto-Negotiation Next Page Transmit Register (ANNPTR), address 0x0007

BIT	BIT NAME	DEFAULT	DESCRIPTION
15	NP	0, RW	**Next Page Indication:** 0 = No other Next Page Transfer desired 1 = Another Next Page desired
14	RESERVED	0, RO	**RESERVED:** Writes ignored, read as 0
13	MP	1, RW	**Message Page:** 1 = Message Page 0 = Unformatted Page
12	ACK2	0, RW	**Acknowledge2:** 1 = Will comply with message 0 = Cannot comply with message Acknowledge2 is used by the next page function to indicate that Local Device has the ability to comply with the message received.
11	TOG_TX	0, RO	**Toggle:** 1 = Value of toggle bit in previously transmitted Link Code Word was 0 0 = Value of toggle bit in previously transmitted Link Code Word was 1 Toggle is used by the Arbitration function within Auto-Negotiation to synchronize with the Link Partner during Next Page exchange. This bit always takes the opposite value of the Toggle bit in the previously exchanged Link Code Word.
10:0	CODE	000 0000 0001, RW	This field represents the code field of the next page transmission. If the MP bit is set (bit 13 of this register), then the code is interpreted as a *Message Page*, as defined in annex 28C of IEEE 802.3u. Otherwise, the code is interpreted as an *Unformatted Page*, and the interpretation is application specific. The default value of the CODE represents a Null Page as defined in Annex 28C of IEEE 802.3u.

8.1.9 Auto-Negotiation Link Partner Ability Next Page Register (ANLNPTR)

This register contains the next page information sent by this device to its Link Partner during Auto-Negotiation.

Table 8-12. Auto-Negotiation Link Partner Ability Register Next Page (ANLNPTR), address 0x0008

BIT	BIT NAME	DEFAULT	DESCRIPTION
15	NP	0, RO	**Next Page Indication:** 1 = No other Next Page Transfer desired 0 = Another Next Page desired
14	ACK	0, RO	**Acknowledge:** 1 = Link Partner acknowledges reception of the ability data word 0 = Not acknowledged The Auto-Negotiation state machine automatically controls this bit based on the incoming FLP bursts. Software should not attempt to write to this bit.
13	MP	1, RO	**Message Page:** 1 = Message Page 0 = Unformatted Page
12	ACK2	0, RO	**Acknowledge2:** 1 = Link Partner has the ability to comply to next-page message 0 = Link Partner cannot comply to next-page message Acknowledge2 is used by the next page function to indicate that Local Device has the ability to comply with the message received.
11	Toggle	0, RO	**Toggle:** 1 = Value of toggle bit in previously transmitted Link Code Word was 0 0 = Value of toggle bit in previously transmitted Link Code Word was 1 Toggle is used by the Arbitration function within Auto-Negotiation to synchronize with the Link Partner during Next Page exchange. This bit always takes the opposite value of the Toggle bit in the previously exchanged Link Code Word.
10:0	CODE	000 0000 0001, RO	**Code:** This field represents the code field of the next page transmission. If the MP bit is set (bit 13 of this register), then the code is interpreted as a Message Page, as defined in annex 28C of IEEE 802.3u. Otherwise, the code is interpreted as an Unformatted Page, and the interpretation is application specific. The default value of the CODE represents a Null Page as defined in Annex 28C of IEEE 802.3u.

Copyright © 2011–2014, Texas Instruments Incorporated

8.1.10 Software Strap Control register 1 (SWSCR1)

This register contains the configuration bits used as strapping options or virtual strapping pins during HW RESET. These configuration values are programmed by the system processor after HW_RESET/POR, and then the “Config Done” - bit 15 of register SWSCR1 (0x0009) is set at the end of the configuration. An internal reset pulse is generated and the SW Strap bit values are latched into internal registers.

Table 8-13. SW Strap Control register 1 (SWSCR1), address 0x0009

BIT	BIT NAME	DEFAULT	DESCRIPTION
15	SW Strap Config Done	0, RW	**Software Strap Configuration Done:** 1 = SW Strap configuration is complete, and the PHY can continue and complete its internal reset sequence. 0 = SW strap configuration process is not complete
14	Auto MDI-X Enable	1, SWSC, RW	**Auto MDI/MDIX Enable:** 1 = Enable automatic crossover 0 = Disable automatic crossover This bit determines whether Automatic MDI/MDIX crossover is enabled or not. If Strapping Pin configuration is override, the value of this register is latched at RESET to bit 15 of PHYCR register (0x0019) and defines its value.
13	Auto-Negotiation Enable	1, SWSC, RW	**Auto-Negotiation Enable:** 1 = Auto-Negotiation Enabled 0 = Auto-Negotiation Disabled – Force mode is active This bit determines whether Auto-negotiation is enabled
12:11	AN[1:0]	1, SWSC, RW	**Auto-Negotiation Mode [1:0]:**

ANEN	AN_1	AN_0	Forced Mode
0	0	0	10Base-T, Half-Duplex
0	0	1	10Base-T, Full-Duplex
0	1	0	100Base-TX, Half-Duplex
0	1	1	100Base-TX, Full-Duplex
ANEN	**AN_1**	**AN_0**	**Advertised Mode**
1	0	0	10Base-T, Half or Full-Duplex
1	0	1	100Base-TX, Half or Full-Duplex
1	1	0	10Base-T,Half-Duplex 100Base-TX, Half-Duplex
1	1	1	10Base-T,Half or Full-Duplex 100Base-TX, Half or Full-Duplex

If the Strapping Pin configuration is override, the decoded value of these 3 register bits are latched at RESET to the appropriate bits of BMCR (0x0000) and ANAR (0x0004) and define their values.

10	LED_CFG	1, SWSC, RW	**LED Configuration:** 1 = Select LED configuration Mode 1 0 = Select LED configuration Mode 2 or 3 according to LEDCR register (0x0018) bit 5 and 6. If the Strapping Pin configuration is override, the value of this register is latched at RESET to bit 5 of the PHYCR register (0x0019) and defines its value.

Copyright © 2011–2014, Texas Instruments Incorporated

Table 8-13. SW Strap Control register 1 (SWSCR1), address 0x0009 (continued)

BIT	BIT NAME	DEFAULT	DESCRIPTION
9	RMII Enhanced Mode	0, SWS, RW	**RMII Enhanced Mode:** 1 = Enable RMII Enhanced Mode 0 = RMII operates in normal mode In normal mode, If the line is not idle CRS_DV goes high. As soon as the False Carrier is detected, RX_ER is asserted and RXD is set to “2”. This situation remains for the duration of the receive event. While in enhanced mode, CRS_DV is disqualified and de-asserted when the False Carrier detected. This status also remains for the duration of the receive event. In addition in normal mode, the start of the packet is intact. Each symbol error is indicated by setting RX_ER high. The data on RXD is replaced with “1” starting with the first symbol error. While in enhanced mode, the CRS_DV is de-asserted with the first symbol error.
8	TDR AUTORUN	0, SWS, RW	**TDR Auto Run at link down:** 1 = Enable execution of TDR procedure after link down event 0 = Disable automatic execution of TDR
7	Link Loss Recovery	0, SWS, RW	**Link Loss Recovery:** 1 = Enable Link Loss Recovery mechanism. This mode allow recovery from short interference and continue to hold the link up for period of additional few mSec till the short interference will gone and the signal is OK. 0 = Normal Link Loss operation. Link status will go down approximately 250µs from signal loss.
6	Fast Auto MDI-X	0, SWS, RW	**Fast Auto MDI/MDIX:** 1 = Enable Fast Auto MDI/MDIX mode 0 = Normal Auto MDI/MDIX mode. If both link partners are configured to work in Force 100Base-TX mode (Auto-Negotiation is disabled), this mode enables Automatic MDI/MDIX resolution in a short time.
5	Robust Auto MDI-X	0, SWS, RW	**Robust Auto MDI-X :** 1 = Enable Robust Auto MDI/MDIX resolution 0 = Normal Auto MDI/MDIX mode If link partners are configured to operational modes that are not supported by normal Auto MDI/MDIX mode (like Auto-Neg versus Force 100Base-TX or Force 100Base-TX versus Force 100Base-TX), this Robust Auto MDI/MDIX mode allows MDI/MDIX resolution and prevents deadlock.
4	Fast AN En	0, SWS, RW	**Fast AN En:** 1 = Enable Fast Auto-Negotiation mode – The PHY auto-negotiates using Timer setting according to Fast AN Sel bits (bits 3:2 this register) 0 = Disable Fast Auto-Negotiation mode – The PHY auto-negotiates using normal Timer setting Adjusting these bits reduces the time it takes to Auto-negotiate between two PHYs. **Note:** When using this option care must be taken to maintain proper operation of the system. While shortening these timer intervals may not cause problems in normal operation, there are certain situations where this may lead to problems.

Copyright © 2011–2014, Texas Instruments Incorporated

Table 8-13. SW Strap Control register 1 (SWSCR1), address 0x0009 (continued)

BIT	BIT NAME	DEFAULT	DESCRIPTION
3:2	Fast AN Sel	0, SWS, RW	**Fast Auto-Negotiation Select bits:** **Fast AN Select** / **Break Link Timer** / **Link Fail Inhibit Timer** / **Auto-Neg Wait Timer** <00> / 80 / 50 / 35 <01> / 120 / 75 / 50 <10> / 240 / 150 / 100 <11> / NA / NA / NA Adjusting these bits reduces the time it takes to Auto-negotiate between two PHYs. In Fast AN mode, both PHYs should be configured to the same configuration. These 2 bits define the duration for each state of the Auto Negotiation process according to the table above. The new duration time must be enabled by setting “Fast AN En” - bit 4 of this register. **Note:** Using this mode in cases where both link partners are not configured to the same Fast Auto-negotiation configuration might produce scenarios with unexpected behavior.
1	Fast RXDV Detection	0, SWS, RW	**Fast RXDV Detection:** 1 = Enable assertion high of RX_DV on receive packet due to detection of /J/ symbol only. If a consecutive /K/ does not appear, RX_ER is generated. 0 = Disable Fast RX_DV detection. The PHY operates in normal mode - RX_DV assertion after detection of /J/K/.
0	INT OE	0, SWS, RW	**$\overline{\text{INT}}$/$\overline{\text{PWDN}}$ Enable:** 1 = $\overline{\text{INT}}$/$\overline{\text{PWDN}}$ Pin is an open-drain Interrupt Output. 0 = $\overline{\text{INT}}$/$\overline{\text{PWDN}}$ Pin is active-low Power Down input. $\overline{\text{RESET}}$ (applied after SW Strap Config. finishes) latches the value of this register bit to bit 0 of the PHYSCR register (0x0011); this defines the PHYSCR[0] value. The INT OE bit, as opposed to other SWSC bits, has no external pin to determine the default value. The INT OE default value is always zero, unless changed during SW strap configuration mode.

8.1.11 Software Strap Control register 2 (SWSCR2)

This register contains the configuration bits used as strapping options or virtual strapping pins during HW RESET. These configuration values are programmed by the system processor after HW_RESET/POR, and then the "Config Done" - bit 15 of register SWSCR1 (0x0009) is set at the end of the configuration. An internal reset pulse is generated and the SW Strap bit values are latched into internal registers.

Table 8-14. SW Strap Control register 2 (SWSCR2), address 0x000A

BIT	BIT NAME	DEFAULT	DESCRIPTION
15:14	RESERVED	0, RO	**RESERVED:** Writes ignored, read as 0.
14	RESERVED	0, RO	**RESERVED:** Writes ignored, read as 0.
13:7	RESERVED	0, SWS, RW	**RESERVED**
6	Fast Link-Up in Parallel Detect	0, SWS, RW	**Fast Link-Up in Parallel Detect Mode:** 1 = Enable Fast Link-Up time During Parallel Detection 0 = Normal Parallel Detection link establishment In Fast Auto MDI-X and in Robust Auto MDI-X modes (bits 6 and 5 in register SWSCR1), this bit is automatically set.
5	Extended FD Ability	0, SWS, RW	**Extended Full-Duplex Ability:** 1 = Force Full-Duplex while working with link partner in forced 100B-TX. When the PHY is set to Auto-Negotiation or Force 100B-TX and the link partner is operated in Force 100B-TX, the link is always Full Duplex 0 = Disable Extended Full Duplex Ability. Decision to work in Full Duplex or Half Duplex mode follows IEEE specification.
4	Enhanced LED Link	0, SWS, RW	**Enhanced LED Link Functionality:** 1 = LED Link is ON only when link is established in 100B-TX Full Duplex mode. 0 = LED Link is ON when link is established.
3	Isolate MII in 100BT HD	0, SWS, RW	**Isolate MII outputs when FD Link @ 100BT is not achievable:** 1 = When HD link established in 100B-TX MII outputs are isolated 0 = Normal MII outputs operation
2	RXERR During IDLE	1, SWS, RW	**Detection of Receive Symbol Error During IDLE State:** 1 = Enable detection of Receive symbol error during IDLE state 0 = Disable detection of Receive symbol error during IDLE state.
1	Odd-Nibble Detection Disable	0, SWS, RW	**Detection of Transmit Error:** 1 = Disable detection of transmit error in odd-nibble boundary 0 = Enable detection of de-assertion of TX_EN on an odd-nibble boundary. In this case TX_EN is extended by one additional TX_CLK cycle and behaves as if TX_ER were asserted during that additional cycle.
0	RMII Receive Clock	0, SWS, RW	**RMII Receive Clock:** 1 = RMII Data (RXD [1:0]) is sampled and referenced to RX_CLK 0 = RMII Data (RXD [1:0]) is sampled and referenced to XI

Copyright © 2011–2014, Texas Instruments Incorporated

8.1.12 Software Strap Control Register 3 (SWSCR3)

This register contains the configuration bits used as strapping options or virtual strapping pins during HW RESET. These configuration values are programmed by the system processor after HW_RESET/POR, and then the "Config Done" - bit 15 of register SWSCR1 (0x0009) is set at the end of the configuration. An internal reset pulse is generated and the SW Strap bit values are latched into internal registers.

Table 8-15. SW Strap Control register 3 (SWSCR3), address 0x000B

BIT	BIT NAME	DEFAULT	DESCRIPTION
15:7	RESERVED	0, RO	**RESERVED:** Writes ignored, read as 0.
6	Polarity Swap	0, SWS, RW	**Polarity Swap:** 1 = Inverted polarity on both pairs: TPTD+ ↔ TPTD-, TPRD+ ↔ TPRD- 0 = Normal polarity **Port Mirror function:** To Enable port mirroring, set bit 5 and this bit high.
5	MDI/MDIX Swap	0, SWS, RW	MDI/MDIX Swap: 1 = Swap MDI pairs (Receive on TPTD pair, Transmit on TPRD pair) 0 = MDI pairs normal (Receive on TPRD pair, Transmit on TPTD pair) **Port Mirror function:** To Enable port mirroring, set this bit and bit 6 high.
4	Bypass 4B/5B	0, SWS, RW	**Bypass 4B/5B Encoder/Decoder Functionality:** 1 = Bypass the 4B/5B Encoder in TX path *and* the Decoder in RX path to allow direct 5-bit TX and 5-bit RX interface to/from the MAC. In the TX path, the additional TXD [4] input pin is the TDI (pin 12) and in the RX path, the additional RXD [4] output pin is the RXERR (pin 41). **Note:** The PHY must be configured to operate in MII mode. 0 = Normal operation
3:0	Fast Link Down Mode	0, SWS, RW	**Fast Link Down Modes:** Bit 3 Drop the link based on **RX Error count** of the MII interface – When a predefined number of 32 RX Error occurrences in a 10µs interval is reached, the link will be dropped. Bit 2 Drop the link based on **MLT3 Errors count** (Violation of the MLT3 coding in the DSP output) – When a predefined number of 20 MLT3 Error occurrences in a 10µs interval is reached, the link will be dropped. Bit 1 Drop the link based on **Low SNR Threshold** – When a predefined number of 20 Threshold crossing occurrences in a 10µs interval is reached, the link will be dropped. Bit 0 Drop the link based on **Signal/Energy loss** indication – When the Energy detector indicates Energy Loss, the link will be dropped. Typical reaction time is 10µs. The Fast Link Down function is an OR of all these 4 options, so the designer can enable combinations of these conditions.

8.1.13 Extended Register Addressing

REGCR (0x000D) and ADDAR (0x000E) allow read/write access to the extended register set (addresses above 0x001F) using indirect addressing.

- **REGCR [15:14] = 00:** A write to ADDAR modifies the extended register set address register. This address register must be initialized in order to access any of the registers within the extended register set.
- **REGCR [15:14] = 01:** A read/write to ADDAR operates on the register within the extended register set selected (pointed to) by the value in the address register. The address register contents (pointer) remain unchanged.
- **REGCR [15:14] = 10:** A read/write to ADDAR operates on the register within the extended register set selected (pointed to) by the value in the address register. After that access is complete, for both reads and writes, the value in the address register is incremented.
- **REGCR [15:14] = 11:** A read/write to ADDAR operates on the register within the extended register set selected (pointed to) by the value in the address register. After that access is complete, for write accesses only, the value in the address register is incremented. For read accesses, the value of the address register remains unchanged.

Copyright © 2011–2014, Texas Instruments Incorporated

8.1.13.1 Register Control Register (REGCR)

This register is the MDIO Manageable MMD access control. In general, register REGCR (4:0) is the device address DEVAD that directs any accesses of the ADDAR (0x000E) register to the appropriate MMD. REGCR also contains selection bits for auto increment of the data register. This register contains the device address to be written to access the extended registers. Write 0x1F into bits 4:0 of this register. REGCR also contains selection bits (15:14) for the address auto-increment mode of ADDAR.

Table 8-16. Register Control Register (REGCR), address 0x000D

BIT	BIT NAME	DEFAULT	DESCRIPTION
15:14	Function	0, RW	00 = Address 01 = Data, no post increment 10 = Data, post increment on read and write 11 = Data, post increment on write only
13:5	RESERVED	0, RO	**RESERVED: Writes ignored, read as 0**.
4:0	DEVAD	0, RW	Device Address: In general, these bits [4:0] are the device address DEVAD that directs any accesses of ADDAR register (0x000E) to the appropriate MMD. Specifically, the TLK110 uses the vendor specific DEVAD [4:0] = “11111” for accesses. All accesses through registers REGCR and ADDAR should use this DEVAD. Transactions with other DEVAD are ignored.

8.1.13.2 Address or Data Register (ADDAR)

This register is the address/data MMD register. ADDAR is used in conjunction with REGCR register (0x000D) to provide the access by indirect read/write mechanism to the extended register set.

Table 8-17. Data Register (ADDAR), address 0x000E

BIT	BIT NAME	DEFAULT	DESCRIPTION
15:0	Addr/data	0, RW	If REGCR register 15:14 = 00, holds the MMD DEVAD's address register, otherwise holds the MMD DEVAD's data register

8.1.14 PHY Status Register (PHYSTS)

This register provides quick access to commonly accessed PHY control status and general information.

Table 8-18. PHY Status Register (PHYSTS), address 0x0010

BIT	NAME	DEFAULT	DESCRIPTION
15	RESERVED	0, RO	**RESERVED:** Writes ignored, read as 0.
14	MDI-X Mode	0,RO	**MDI-X mode as reported by the Auto-Negotiation state machine:** 1 = MDI pairs swapped (Receive on TPTD pair, Transmit on TPRD pair) 0 = MDI pairs normal (Receive on TRD pair, Transmit on TPTD pair) This bit will be affected by the settings of the AMDIX_EN and FORCE_MDIX bits in the PHYCR register. When MDIX is enabled, but not forced, this bit will update dynamically as the Auto-MDIX algorithm swaps between MDI and MDI-X configurations.
13	Receive Error Latch	0,RO/LH	**Receive Error Latch:** 1 = Receive error event has occurred since last read of RXERCNT register (0x0015) 0 = No receive error event has occurred This bit will be cleared upon a read of the RECR register
12	Polarity Status	0,RO	**Polarity Status:** 1 = Inverted Polarity detected 0 = Correct Polarity detected This bit is a duplication of bit 4 in the 10BTSCR register (0x001A). This bit will be cleared upon a read of the 10BTSCR register, but not upon a read of the PHYSTS register.
11	False Carrier Sense Latch	0,RO/LH	**False Carrier Sense Latch:** 1 = False Carrier event has occurred since last read of FCSCR register (0x0014) 0 = No False Carrier event has occurred

Copyright © 2011–2014, Texas Instruments Incorporated

Table 8-18. PHY Status Register (PHYSTS), address 0x0010 (continued)

BIT	NAME	DEFAULT	DESCRIPTION
			This bit will be cleared upon a read of the FCSR register.
10	Signal Detect	0,RO/LL	**Signal Detect:** Active high 100Base-TX unconditional Signal Detect indication from PMD
9	Descrambler Lock	0,RO/LL	**Descrambler Lock:** Active high 100Base-TX Descrambler Lock indication from PMD
8	Page Received	0,RO	**Link Code Word Page Received:** 1 = A new Link Code Word Page has been received. This bit is a duplicate of Page Received (bit 1) in the ANER register and it is cleared on read of the ANER register (0x0006). 0 = Link Code Word Page has not been received. This bit will not be cleared upon a read of the PHYSTS register.
7	MII Interrupt	0,RO	**MII Interrupt Pending:** 1 = Indicates that an internal interrupt is pending. Interrupt source can be determined by reading the MISR Register (0x0012). Reading the MISR will clear this Interrupt bit indication. 0 = No interrupt pending
6	Remote Fault	0,RO	**Remote Fault:** 1 = Remote Fault condition detected. Fault criteria: notification from Link Partner of Remote Fault via Auto-Negotiation. Cleared on read of BMSR register (0x0001) or by reset. 0 = No remote fault condition detected
5	Jabber Detect	0,RO	**Jabber Detect:** 1 = Jabber condition detected. This bit has meaning only in 10 Mb/s mode. This bit is a duplicate of the Jabber Detect bit in the BMSR register (0x0001). 0 = No Jabber This bit will not be cleared upon a read of the PHYSTS register.

Table 8-18. PHY Status Register (PHYSTS), address 0x0010 (continued)

BIT	NAME	DEFAULT	DESCRIPTION
4	Auto-Neg Status	0,RO	**Auto-Negotiation Status:** 1 = Auto-Negotiation complete 0 = Auto-Negotiation not complete
3	MII Loopback Status	0,RO	**MII Loopback:** 1 = Loopback active (enabled) 0 = Normal operation
2	Duplex Status	0,RO	**Duplex Status:** 1 = Full duplex mode 0 = Half duplex mode This bit indicates duplex status and is determined from Auto-Negotiation or Forced Modes. Therefore, it is only valid if Auto-Negotiation is enabled and complete and there is a valid link or if Auto-Negotiation is disabled and there is a valid link.
1	Speed Status	0,RO	**Speed Status:** 1 = 10 Mb/s mode 0 = 100 Mb/s mode This bit indicates the status of the speed and is determined from Auto-Negotiation or Forced Modes. Speed Status is only valid if Auto-Negotiation is enabled and complete and there is a valid link or if Auto-Negotiation is disabled and there is a valid link.
0	Link Status	0,RO	**Link Status:** 1 = Valid link established (for either 10 or 100 Mb/s operation). This bit is a duplicate of the Link Status bit in the BMSR register (0x0001). 0 = Link not established This bit will not be cleared upon a read of the PHYSTS register.

8.1.15 PHY Specific Control Register (PHYSCR)

This register implements the PHY Specific Control register. This register allows access to general functionality inside the PHY to enable operation in reduced power modes and control interrupt mechanism.

Table 8-19. PHY Specific Control Register (PHYSCR), address 0x0011

BIT	NAME	DEFAULT	DESCRIPTION
15	Disable PLL	0,RW	**Disable PLL:** 1 = Disable internal clocks Circuitries 0 = Normal mode of operation **Note:** Clock Circuitry can be disabled only in IEEE power-down mode
14	PS Enable	0,RW	**Power Save Modes Enable:** 1 = Enable power save modes 0 = Normal mode of operation
13:12	PS Modes	00,RW	**Power Save Modes:**

Power Mode	Name	Description
<00>	Normal	Normal operation mode. PHY is fully functional
<01>	IEEE power down	Low Power mode that shut down all internal circuitry beside SMI functionality.
<10>	Active Sleep	Low Power Active WOL mode that shut down all internal circuitry beside SMI and energy detect functionalities. In this mode the PHY sends NLP every 1.4 Sec to wake up link-partner. Automatic power-up is done when link partner is detected.
<11>	Passive Sleep	Low Power WOL mode that shut down all internal circuitry beside SMI and energy detect functionalities. Automatic power-up is done when link partner is detected.

Copyright © 2011–2014, Texas Instruments Incorporated

Table 8-19. PHY Specific Control Register (PHYSCR), address 0x0011 (continued)

BIT	NAME	DEFAULT	DESCRIPTION
11	Scrambler Bypass	0,RW	**Scrambler Bypass:** 1 = Scrambler bypass enabled 0 = Scrambler bypass disabled
10	RESERVED	0, RO	**RESERVED:** Writes ignored, read as 0.
9:8	Loopback FIFO Depth	01,RW	Far-End Loopback FIFO Depth: 00 = 4 nibbles FIFO 01 = 5 nibbles FIFO 10 = 6 nibbles FIFO 11 = 8 nibbles FIFO This FIFO is used to adjust RX (recovered) clock rate to TX clock rate. FIFO depth need to be set based on expected maximum packet size and clock accuracy. Default value sets to 5 nibbles.
7:5	RESERVED	000, RO	**RESERVED:** Writes ignored, read as 0.
4	COL FD Enable	0, RW	**Collision in Full-Duplex Mode:** 1 = Enable generating Collision signaling in Full Duplex 0 = Disable Collision indication in Full Duplex mode. Collision will be active in Half Duplex only.
3	INT POL	1,RW	**Interrupt Polarity:** 1 = Steady state (normal operation) is 1 logic and during interrupt is 0 logic. 0 = Steady state (normal operation) is 0 logic and during interrupt is 1 logic.
2	tint	0,RW	**Test Interrupt:** 1 = Generate an interrupt 0 = Do not generate interrupt Forces the PHY to generate an interrupt to facilitate interrupt testing. Interrupts will continue to be generated as long as this bit remains set.
1	INT_EN	0,RW	**Interrupt Enable:** 1 = Enable event based interrupts 0 = Disable event based interrupts Enable interrupt dependent on the event enables in the MISR register (0x0012).
0	INT_OE	0,RW	**Interrupt Output Enable:** 1 = $\overline{\text{INT}}$ / $\overline{\text{PWDN}}$ is an Interrupt Output 0 = $\overline{\text{INT}}$ / $\overline{\text{PWDN}}$ is a Power Down Enable active low interrupt events via the $\overline{\text{INT}}$ / $\overline{\text{PWDN}}$ pin by configuring the $\overline{\text{INT}}$ / $\overline{\text{PWDN}}$ pin as an output.

8.1.16 MII Interrupt Status Register 1 (MISR1)

This register contains events status and enables for the interrupt function. If an event has occurred since the last read of this register, the corresponding status bit will be set. If the corresponding enable bit in the register is set, an interrupt will be generated if the event occurs. The PHYSCR register (0x0011) bits 1 and 0 must also be set to allow interrupts. The status indications in this register will be set even if the interrupt is not enabled.

Table 8-20. MII Interrupt Status Register 1 (MISR1), address 0x0012

BIT	NAME	DEFAULT	DESCRIPTION
15:14	RESERVED	00, RO	**RESERVED:** Writes ignored, read as 0.
13	Link Status Changed INT	0,RO, COR	**Change of Link Status interrupt:** 1 = Change of link status interrupt is pending 0 = No change of link status
12	Speed Changed INT	0,RO, COR	**Change of Speed Status interrupt:** 1 = Change of speed status interrupt is pending 0 = No change of speed status

Table 8-20. MII Interrupt Status Register 1 (MISR1), address 0x0012 (continued)

BIT	NAME	DEFAULT	DESCRIPTION
11	Duplex Mode Changed INT	0,RO, COR	**Change of duplex status interrupt:** 1 = Duplex status change interrupt is pending 0 = No change of duplex status
10	Auto-Negotiation Completed INT	0,RO, COR	**Auto-Negotiation Complete interrupt:** 1 = Auto-negotiation complete interrupt is pending. 0 = No Auto-negotiation complete event is pending
9	FC HF INT	0,RO, COR	**False Carrier Counter half-full interrupt:** 1 = False carrier counter (Register FCSCR, address 0x0014) exceeds half-full interrupt is pending 0 = False carrier counter half-full event is not pending
8	RE HF INT	0,RO, COR	**Receive Error Counter half-full interrupt:** 1 = Receive error counter (Register RECR, address 0x0015) exceeds half full interrupt is pending 0 = No Receive error counter half full event pending
7:6	RESERVED	00, RO	**RESERVED:** Writes ignored, read as 0.
5	Link Status Changed EN	0, RW	**Enable** Interrupt on change of link status
4	Speed Changed EN	0, RW	**Enable** Interrupt on change of speed status
3	Duplex Mode Changed EN	0, RW	**Enable** Interrupt on change of duplex status
2	Auto-Negotiation Completed EN	0, RW	**Enable** Interrupt on Auto-negotiation complete event
1	FC HF EN	0, RW	**Enable** Interrupt on False Carrier Counter Register half-full event
0	RE HF EN	0, RW	**Enable** Interrupt on Receive Error Counter Register half-full event

8.1.17 MII Interrupt Status Register 2 (MISR2)

This register contains events status and enables for the interrupt function. If an event has occurred since the last read of this register, the corresponding status bit will be set. If the corresponding enable bit in the register is set, an interrupt will be generated if the event occurs. The PHYSCR register (0x0011) bits 1 and 0 must also be set to allow interrupts. The status indications in this register will be set even if the interrupt is not enabled.

Table 8-21. MII Interrupt Status Register 2 (MISR2), address 0x0013

BIT	NAME	DEFAULT	DESCRIPTION
15	RESERVED	0, RO	**RESERVED:** Writes ignored, read as 0.
14	AN Error INT	0,RO, COR	**Auto-Negotiation Error Interrupt:** 1 = Auto-negotiation error interrupt is pending 0 = No Auto-negotiation error event pending
13	Page Rec INT	0,RO, COR	**Page Receive Interrupt:** 1 = Page has been received 0 = Page has not been received
12	Loopback FIFO OF/UF INT	0,RO, COR	**Loopback FIFO Overflow/Underflow Event Interrupt:** 1 = FIFO Overflow/Underflow event interrupt pending 0 = No FIFO Overflow/Underflow event pending
11	MDI Crossover Changed INT	0,RO, COR	**MDI/MDIX Crossover Status Changed Interrupt:** 1 = MDI crossover status changed interrupt is pending 0 = MDI crossover status has not changed
10	Sleep Mode INT	0,RO, COR	**Sleep Mode Event Interrupt:** 1 = Sleep Mode event interrupt is pending 0 = No sleep mode event pending
9	Polarity Changed INT	0,RO, COR	**Polarity Changed Interrupt:** 1 = Data polarity changed interrupt pending 0 = No Data polarity event pending
8	Jabber Detect INT	0,RO	**Jabber Detect Event Interrupt:** 1 = Jabber detect event interrupt pending 0 = No Jabber detect event pending
7	RESERVED	0,RW	**RESERVED:** Writes ignored, read as 0
6	AN Error EN	0,RW	**Enable** Interrupt on Auto-Negotiation error event

Copyright © 2011–2014, Texas Instruments Incorporated

Table 8-21. MII Interrupt Status Register 2 (MISR2), address 0x0013 (continued)

BIT	NAME	DEFAULT	DESCRIPTION
5	Page Rec EN	0,RW	**Enable** Interrupt on page receive event
4	Loopback FIFO OF/UF EN	0,RW	**Enable** Interrupt on loopback FIFO overflow/underflow event
3	MDI Crossover Changed EN	0,RW	**Enable** Interrupt on change of MDI/X status
2	Sleep Mode Event EN	0,RW	**Enable** Interrupt sleep mode event
1	Polarity Changed EN	0,RW	**Enable** Interrupt on change of polarity status
0	Jabber Detect EN	0,RW	**Enable** Interrupt on Jabber detection event

8.1.18 False Carrier Sense Counter Register (FCSCR)

This counter provides information required to implement the "False Carriers" attribute within the MAU managed object class of Clause 30 of the IEEE 802.3u specification.

Table 8-22. False Carrier Sense Counter Register (FCSCR), address 0x0014

BIT	NAME	DEFAULT	DESCRIPTION
15:8	RESERVED	0000 0000, RO	**RESERVED:** Writes ignored, read as 0
7:0	FCSCNT	0,RO / COR	**False Carrier Event Counter:** This 8-bit counter increments on every false carrier event. This counter stops when it reaches its maximum count (FFh). When the counter exceeds half full (7Fh), an interrupt event is generated. This register is cleared on read.

8.1.19 Receiver Error Counter Register (RECR)

This counter provides information required to implement the "Symbol Error During Carrier" attribute within the PHY managed object class of Clause 30 of the IEEE 802.3u specification.

Table 8-23. Receiver Error Counter Register (RECR), address 0x0015

BIT	BIT NAME	DEFAULT	DESCRIPTION
15:0	RX Error Count	0, RO, / COR	**RX_ER Counter:** When a valid carrier is present (only while RXDV is set), and there is at least one occurrence of an invalid data symbol, this 16-bit counter increments for each receive error detected. The RX_ER counter does not count in MII loopback mode. The counter stops when it reaches its maximum count of FFFFh. When the counter exceeds half-full (7FFFh), an interrupt is generated. This register is cleared on read.

Copyright © 2011–2014, Texas Instruments Incorporated

8.1.20 BIST Control Register (BISCR)

This register is used for Build-In Self Test (BIST) configuration. The BIST functionality provides Pseudo Random Bit Stream (PRBS) mechanism including packet generation generator and checker. Selection of the exact loopback point in the signal chain is also done in this register.

Table 8-24. BIST Control Register (BISCR), address 0x0016

BIT	NAME	DEFAULT	DESCRIPTION
15	RESERVED	0, RO	**RESERVED:** Writes ignored, read as 0
14	PRBS Count Mode	0, RW	**PRBS Single/Continues Mode:** 1 = Continuous mode, the PRBS counters reaches max count value, pulse is generated and counter starts counting from zero again. 0 = Single mode, When BIST Error Counter reaches its max value, PRBS checker stops counting.
13	Generate PRBS Packets	0, RW	**Generated PRBS Packets:** 1 = When packet generator is enabled, generate continuous packets with PRBS data. When packet generator is disabled, PRBS checker is still enabled. 0 = When packet generator is enabled, generate single packet with constant data. PRBS gen/check is disabled.
12	Packet Generation Enable	0, RW	**Packet Generation Enable:** 1 = Enable packet generation with PRBS data 0 = Disable packet generator
11	PRBS Checker Lock	0,RO	**PRBS Checker Lock Indication:** 1 = PRBS checker is locked and synced on received bit stream 0 = PRBS checker is not locked
10	PRBS Checker Sync Loss	0,RO,LH	**PRBS Checker Sync Loss Indication:** 1 = PRBS checker lose sync on received bit stream – This is an error indication 0 = PRBS checker is not locked
9	Packet Gen Status	0,RO	**Packet Generator Status Indication:** 1 = Packet Generator is active and generate packets 0 = Packet Generator is off
8	Power Mode	0,RO	**Sleep Mode Indication:** 1 = Indicate that the PHY is in normal power mode 0 = Indicate that the PHY is in one of the sleep modes, either active or passive
7	RESERVED	0, RO	RESERVED: Writes ignored, read as 0.
6	Transmit in MII Loopback	0, RW	**Transmit Data in MII Loop-back Mode (valid only at 100BT):** 1 = Enable transmission of the data from the MAC received on the TX pins to the line in parallel to the MII loopback to RX pins. This bit may be set only in MII Loopback mode – setting bit 14 in BMCR register (0x0000). 0 = Data is not transmitted to the line in MII loopback
5	RESERVED	0, RO	**RESERVED:** Must be 0
4:0	Loopback Mode	0, RW	**Loop-back Mode Select:** The PHY provides several options for Loopback that test and verify various functional blocks within the PHY. Enabling loopback mode allows in-circuit testing of the TLK110 digital and analog data path Near-end Loopback 00001 = PCS Input Loopback 00010 = PCS Output Loopback 00100 = Digital Loopback 01000 = Analog Loopback (requires 100Ω termination) Far-end Loopback: 10000 = Reverse Loopback

Copyright © 2011–2014, Texas Instruments Incorporated

8.1.21 RMII Control and Status Register (RCSR)

This register configures the RMII Mode of operation. When RMII mode is disabled, the RMII functionality is bypassed.

Table 8-25. RMII Control and Status Register (RCSR), address 0x0017

BIT	NAME	DEFAULT	DESCRIPTION
15:6	RESERVED	0000 0000 00, RO	**RESERVED:** Writes ignored, read as 0.
5	RMII Mode	0, RW, Pin_Strap	**RMII Mode Enable:** RMII Mode is operational if device powered up in RMII mode (pin_strap) and 50Mhz clock present. *Please note*, that in order to switch from RMII to MII and vise versa, the PHY must initialize after power up in RMII mode (Strap is '1' and REF_CLK is 50MHz). If the PHY initializes in MII mode, this bit has no effect. 1 = Enable RMII (Reduced MII) mode of operation 0 = Enable MII mode of operation
4	RMII Revision Select	0, RW	**RMII Revision Select:** 1 = (RMII revision 1.0) CRS_DV will remain asserted until final data is transferred. CRS_DV will not toggle at the end of a packet. 0 = (RMII revision 1.2) CRS_DV will toggle at the end of a packet to indicate de-assertion of CRS.
3	RMII OVFL Status	0, COR	**RX FIFO Over Flow Status:** 1 = Normal 0 = Overflow detected
2	RMII OVFL Status	0, COR	**RX FIFO Under Flow Status:** 1 = Normal 0 = Underflow detected
1:0	ELAST_BUF	01, RW	**Receive Elasticity Buffer Size:** This field controls the Receive Elasticity Buffer which allows for frequency variation tolerance between the 50MHz RMII clock and the recovered data. The following values indicate the tolerance in bits for a single packet. The minimum setting allows for standard Ethernet frame sizes at ±50ppm accuracy for both RMII and Receive clocks. For greater frequency tolerance the packet lengths may be scaled (for ±100ppm, divide the packet lengths by 2). 00 = 14 bit tolerance (up to 16800 byte packets) 01 = 2 bit tolerance (up to 2400 byte packets) 10 = 6 bit tolerance (up to 7200 byte packets) 11 = 10 bit tolerance (up to 12000 byte packets)

Copyright © 2011–2014, Texas Instruments Incorporated

8.1.22 LED Control Register (LEDCR)

This register provides the ability to directly manually control any or all LED outputs.

Table 8-26. LED Control Register (LEDCR), address 0x0018

BIT	NAME	DEFAULT	DESCRIPTION
15:11	RESERVED	0000 0, ro	**RESERVED:** Writes ignored, read as 0.
10:9	Blink Rate	10, RW	**LED Blinking Rate (ON/OFF duration):** 00 = 20Hz (50mSec) 01 = 10Hz (100mSec) 10 = 5Hz (200mSec) 11 = 2Hz (500mSec)
8	LED Speed Polarity	0, RW, Pin_Strap	**LED Speed Polarity Setting:** 1 = Active High polarity setting 0 = Active Low polarity setting Speed LED's polarity defined by strapping value of this pin. This register allows override of this strapping value.
7	LED Link Polarity	0, RW, Pin_Strap	**LED Link Polarity Setting:** 1 = Active High polarity setting 0 = Active Low polarity setting Link LED polarity defined by strapping value of this pin. This register allows override of this strapping value.
6	LED Active Polarity	0, RW, Pin_Strap	**LED Activity Polarity Setting:** 1 = Active High polarity setting 0 = Active Low polarity setting Activity LED's polarity defined by strapping value of this pin. This register allows override of this strapping value.
5	Drive Speed LED	0,RW	**Drive LED Speed to the forced On/Off setting defined in bit 2:** 1 = Drive value of On/Off bit onto LED_SPEED output pin 0 = Normal operation
4	Drive Link LED	0, RW	**Drive LED Link to the forced On/Off setting defined in bit 1:** 1 = Drive value of On/Off bit onto LED_LINK output pin 0 = Normal operation
3	Drive Active LED	0,RW	**Drive LED Activity to the forced On/Off setting defined in bit 0:** 1 = Drive value of On/Off bit onto LED_ACT output pin 0 = Normal operation
2	Speed LED On/Off Setting	0, RW	Value to force on Speed LED output
1	Link LED On/Off Setting	0, RW	Value to force on Link LED output
0	Act LED On/Off Setting	0, RW	Value to force on Activity LED output

8.1.23 PHY Control Register (PHYCR)

This register provides the ability to control and set general functionality inside the PHY.

Table 8-27. PHY Control Register (PHYCR), address 0x0019

BIT	NAME	DEFAULT	DESCRIPTION
15	Auto MDI/X Enable	1, RW, Pin_Strap	**Auto-MDIX Enable:** 1 = Enable Auto-negotiation Auto-MDIX capability 0 = Disable Auto- negotiation Auto-MDIX capability
14	Force MDI/X	0, RW	**Force MDIX:** 1 = Force MDI pairs to cross. (Receive on TPTD pair, Transmit on TPRD pair) 0 = Normal operation. (Transmit on TPTD pair, Receive on TPRD pair)
13	Pause RX Status	0, RO	**Pause Receive Negotiated Status:** Indicates that pause receive should be enabled in the MAC. Based on bits [11:10] in ANAR register and bits [11:10] in ANLPAR register settings. This function shall be enabled according to IEEE 802.3 Annex 28B Table 28B-3, "Pause Resolution", only if the Auto-Negotiated Highest Common Denominator is a full duplex technology.
12	Pause TX Status	0,RO	**Pause Transmit Negotiated Status:** Indicates that pause transmit should be enabled in the MAC. Based on bits [11:10] in ANAR register and bits [11:10] in ANLPAR register settings. This function shall be enabled according to IEEE 802.3 Annex 28B Table 28B-3, "Pause Resolution", only if the Auto-Negotiated Highest Common Denominator is a full duplex technology.

Copyright © 2011–2014, Texas Instruments Incorporated

Table 8-27. PHY Control Register (PHYCR), address 0x0019 (continued)

BIT	NAME	DEFAULT	DESCRIPTION
11	MI Link Status	0, RO	**MII Link Status:** 1 = 100BT Full-duplex Link is active and it was established using Auto-Negotiation 0 = No active link of 100BT Full-duplex, established using Auto-Negotiation
10:8	RESERVED	000, RO	**RESERVED:** Writes ignored, read as 0.
7	Bypass LED Stretching	0, RW	**Bypass LED Stretching:** 1 = Bypass LED stretching 0 = Normal LED operation Set this bit to 1 to bypass the LED stretching; the LEDs reflect the internal value.
6:5	LED CFG	0, RW 0, RW, Pin_Strap, SWSC_Strap	**LED Configuration Modes:**

Mode	LED_CFG[1]	LED_CFG[0]	LED_LINK	LED_SPEED	LED_ACT
1	Don't Care	1	ON for Good Link OFF for No Link	ON in 100 Mb/s OFF in 10 Mb/s	ON Pulse for Activity OFF for No Activity
2	0	0	ON for Good Link BLINK for Activity		ON for Collision OFF for No Collision
3	1	0			ON for Full Duplex OFF for Half Duplex

BIT	NAME	DEFAULT	DESCRIPTION
4:0	PHY ADDR	0000 1, RO	**PHY Address:** Strapping configuration for PHY Address.

8.1.24 10Base-T Status/Control Register (10BTSCR)

This register provides the ability to control and read status of the PHY's internal 10Base-T functionality.

Table 8-28. 10Base-T Status/Control Register (10BTSCR), address 0x001A

BIT	NAME	DEFAULT	DESCRIPTION
15:14	RESERVED	000, RO	**RESERVED:** Writes ignored, read as 0.
13	Receiver TH	0, RW	**Lower Receiver Threshold Enable:** 1 = Enable 10Base-T lower receiver threshold to allow operation with longer cables 0 = Normal 10Base-T operation
12:9	Squelch	0000, RW	**Squelch Configuration:** Used to set the Peak Squelch 'ON' threshold for the 10Base-T receiver. Every step is equal to 50mV and allow raising/lowering the Squelch threshold from 200mV to 600mV. The default Squelch threshold is set to 200mV.
8	RESERVED	0, RO	**RESERVED:** Writes ignored, read as 0.
7	NLP Disable	0, RW	**NLP Transmission Control:** 1 = Disable transmission of NLPs 0 = Enable transmission of NLPs
6:5	RESERVED	00, RO	**RESERVED:** Writes ignored, read as 0.
4	Polarity Status	0, RO	**10Mb Polarity Status:** 1 = Inverted Polarity detected 0 = Correct Polarity detected This bit is a duplication of bit 12 in the PHYSTS register (0x0010). Both bits will be cleared upon a read of 10BTSCR register, but not upon a read of the PHYSTS register.
3:1	RESERVED	000, RO	**RESERVED:** Writes ignored, read as 0.
0	Jabber Disable	0, RW	**Jabber Disable:** 1 = Jabber function disabled 0 = Jabber function enabled **Note:** This function is applicable only in 10Base-T

Copyright © 2011–2014, Texas Instruments Incorporated

8.1.25 BIST Control and Status Register 1 (BICSR1)

This register provides the total number of error bytes that was received by the PRBS checker and defines the Inter packet Gap (IPG) for the packet generator.

Table 8-29. BIST Control and Status Register 1 (BICSR1), address 0x001B

BIT	BIT NAME	DEFAULT	DESCRIPTION
15:8	BIST Error Count	0, RO	**BIST Error Count:** Holds number of erroneous bytes that were received by the PRBS checker. Value in this register is locked when write is done to bit[0] or bit[1] (see below). When PRBS Count Mode set to zero, count stops on 0xFF. See BISCR register (0x0016) for further details **Note:** Writing "1" to bit 15 will **lock** counter's value for successive read operation and **clear** the BIST Error Counter.
7:0	BIST IPG Length	0111 1101, RW	**BIST IPG Length:** Inter Packet Gap (IPG) Length defines the size of the gap (in bytes) between any 2 successive packets generated by the BIST. Default value is 0x7D which is equal to 125 bytes

8.1.26 BIST Control and Status Register2 (BICSR2)

This register allows programming the length of the generated packets in bytes for the BIST mechanism.

Table 8-30. BIST Control and Status Register 2 (BICSR2), address 0x001C

BIT	BIT NAME	DEFAULT	DESCRIPTION
15:11	RESERVED	0000 0, RO	**RESERVED:** Writes ignored, read as 0.
10:0	BIST Packet Length	101 1101 1100, RW	**BIST Packet Length:** Length of the generated BIST packets. The value of this register defines the size (in bytes) of every packet that generated by the BIST. Default value is 0x5DC which is equal to 1500 bytes

8.2 Cable Diagnostic Control Register (CDCR)

Table 8-31. Cable Diagnostic Control Register (CDCR), address 0x001E

BIT	NAME	DEFAULT	FUNCTION
15	Diagnostic Start	0, RW	**Cable Diagnostic Process Start:** 1 = Start execute cable measurement 0 = Cable Diagnostic is disabled Diagnostic Start bit is cleared with raise of Diagnostic Done indication.
14:10	RESERVED	000 00, RO	**RESERVED:** Writes ignored, read as 0.
9:8	Link Quality	00, RO	**Link Quality Indication** 00 = Reserved 01 = Good Quality Link Indication 10 = Mid Quality Link Indication 11 = Poor Quality Link Indication The value of these bits are valid **only** when link is active – While reading "1" from "Link Status" bit 0 on PHYSTS register (0x0010).
7:4	RESERVED	0000, RO	**RESERVED:** Writes ignored, read as 0.
3:2	RESERVED	00, RO	**RESERVED:** Writes ignored, read as 0.
1	Diagnostic Done	0, RO	**Cable Diagnostic Process Done:** 1 = Indication that cable measurement process completed 0 = Diagnostic has not completed
0	Diagnostic Fail	0, RO	**Cable Diagnostic Process Fail:** 1 = Indication that cable measurement process failed 0 = Diagnostic has not failed

Copyright © 2011–2014, Texas Instruments Incorporated

8.3 PHY Reset Control Register (PHYRCR)

Table 8-32. PHY Reset Control Register (PHYRCR), address 0x001F

BIT	NAME	DEFAULT	FUNCTION
15	Software Reset	0, RW,SC	**Software Reset:** 1 = Reset PHY. This bit is self cleared and has same effect as Hardware reset pin. 0 = Normal Operation
14	Software Restart	0, RW,SC	**Software Restart:** 1 = Reset PHY. This bit is self cleared and resets all PHY circuitry except the registers. 0 = Normal Operation
13:0	RESERVED	00 0000 0000 0000, RO	Writes ignored, read as 0

8.4 TX_CLK Phase Shift Register (TXCPSR)

This register allows programming the phase of the MII transmit clock (TX_CLK pin). The TX_CLK has a fixed phase to the XI pin. However the default phase, while fixed, may not be ideal for all systems, therefore this register may be used by the system to align the reference clock (XI pin) to the TX_CLK. The phase shift value is in 4ns units. The phase shift value should be between 0 and 10 (0ns to 40ns). If value greater than 10 is written, the update value will be the written value modulo 10.

Table 8-33. TX_CLK Phase Shift Register (TXCPSR), address 0x0042

BIT	NAME	DEFAULT	FUNCTION
15:5	RESERVED	0000 0000 000, RO	**RESERVED:** Writes ignored, read as 0
4	Phase Shift Enable	0,RW,SC	**TX Clock Phase Shift Enable:** 1 = Perform Phase Shift to the TX_CLK according to the value written to Phase Shift Value in bits [4:0]. 0 = No change in TX Clock phase
3:0	Phase Shift Value	0000,RW	**TX Clock Phase Shift Value:** The value of this register represents the current phase shift between Reference clock at XI and MII Transmit Clock at TX_CLK. Any different value that will be written to these bits will shift TX_CLK by 4 times the difference (in nSec). For example, if the value of this register is 0x2, Writing 0x9 to this register shifts TX_CLK by 28nS (4 times 7).However, since the maximum difference between XI and TX_CLK could be 40nSec (value of 10) in case of writing value bigger than 10, the updated value is the written value modulo 10.

8.5 Power Back Off Control Register (PWRBOCR)

Table 8-34. Power Back Off Control Register (PWRBOCR), address 0x00AE

BIT	NAME	DEFAULT	FUNCTION
15	RESERVED	1, RO	**RESERVED**
14	RESERVED	0, RO	**RESERVED**
13:9	RESERVED	00 000, RO	**RESERVED**
8:6	Power Back Off	0, RW	**Power Back Off Level:** See Application Note SLLA328 000 = Normal Operation 001 = Level 1 (up to 5m cable between TLK link partners) 010 = Level 2 (up to 80m cable between TLK link partners) 011 = Level 3 (up to 100m cable between TLK link partners) Others = Reserved
5:0	RESERVED	10 0000, RO	**RESERVED**

8.6 Voltage Regulator Control Register (VRCR)

This register gives the host processor the ability to power down the voltage-regulator block of the PHY via register access. This power-down operation is available in systems operating with an external power supply.

Copyright © 2011–2014, Texas Instruments Incorporated

Table 8-35. Voltage Regulator Control Register (VRCR), address 0x00D0

BIT	NAME	DEFAULT	FUNCTION
15	VRPD	0, RW, SC	**Voltage Regulator Power Down:** 1 = Power Down. Allow the system to power down the voltage regulator block of the PHY using register access. 0 = Normal Operation. Voltage Regulator is powered and outputs voltage on the PFBOUT pin.
14:4	RESERVED	000 0000 0000, RW	**RESERVED:** Must be written as 0.
3:0	VR Control	0000, RW	**Voltage Regulator Control** This value should be ignored on read. To write to this register, perform a read followed by a write with the desired value.

8.7 Cable Diagnostic Configuration/Result Registers

8.7.1 ALCD Control and Results 1 (ALCDRR1)

Table 8-36. ALCD Control and Results 1 (ALCDRR1), address 0x0155

BIT	BIT NAME	DEFAULT	DESCRIPTION
15	alcd_start	0, SC	1 = Start ALCD
14:13		00, RO	**RESERVED:** Writes ignored, read as 0.
12	alcd_done	0, RO	**TPTD Diagnostic Bypass** 1 = Bypass TPTD diagnostic. TDR on TPTD pair is not executed. 0 = TDR is executed on TPTD pair
11:4	alcd_out1	0000 0000, RO	**alcd_out1**
3	RESERVED	0, RO	**RESERVED**: Writes ignored, read as 0
2:0	alcd_ctrl	001,RW	**Control of ALCD Average factor**

8.7.2 Cable Diagnostic Specific Control Registers (CDSCR1 - CDSCR4)

Use CDSCR1 to select the channel for the cable diagnostics test. CDSCR1 contains the enable and bypass bits for the diagnostic tests, and defines the number of executed and averaged TDR sequences. CDSCR2 - CDSCR4 configure other parameters for cable diagnostics.

Table 8-37. Cable Diagnostic Specific Control Register (CDSCR), address 0x0170

BIT	BIT NAME	DEFAULT	DESCRIPTION
15	RESERVED	0, RO	**RESERVED:** Writes ignored, read as 0.
14	Diagnostic Cross Disable	0, RW	**Cross TDR Diagnostic mode** 1 = Disable TDR Cross mode – TDR will be executed in regular mode only 0 = Diagnostic of crossing pairs is enabled In Cross Diagnostic mode, the TDR mechanism is looking for reflection on the other pair to check short between pairs.
13	Diagnostic TPTD Bypass	0, RW	**TPTD Diagnostic Bypass** 1 = Bypass TPTD diagnostic. TDR on TPTD pair will not be executed. 0 = TDR is executed on TPTD pair In bypass TPTD, results are available in TPRD slots.
12	Diagnostic TPRD Bypass	0, RO	**TPRD Diagnostic Bypass** 1 = Bypass TPRD diagnostic. TDR on TPRD pair will not be executed. 0 = TDR is executed on TPRD pair
11	RESERVED	1, RW	**RESERVED:** Must be Set to 1.
10:8	Diagnostics Average Cycles	110, RW	**Number Of TDR Cycles to Average:** <000>: 1 TDR cycle <001>: 2 TDR cycles <010>: 4 TDR cycles <011>: 8 TDR cycles <100>: 16 TDR cycles <101>: 32 TDR cycles <110>: 64 TDR cycles (default) <111>: Reserved

Copyright © 2011–2014, Texas Instruments Incorporated

Table 8-37. Cable Diagnostic Specific Control Register (CDSCR), address 0x0170 (continued)

BIT	BIT NAME	DEFAULT	DESCRIPTION
7:0	RESERVED	0, RO	**RESERVED:** Writes ignored, read as 0.

Table 8-38. Cable Diagnostic Specific Control Register 2 (CDSCR2), address 0x0171

BIT	BIT NAME	DEFAULT	DESCRIPTION
15:4	RESERVED	1100 1000 0101, RW	**RESERVED:** Ignore on read
3:0	TDR pulse control	1100, RW	Configure expected self reflection in TDR

Table 8-39. Cable Diagnostic Specific Control Register 3 (CDSCR3), address 0x0173

BIT	BIT NAME	DEFAULT	DESCRIPTION
15:8	Cable length cfg	1111 1111, RW	Configure duration of listening to detect long cable reflections
7:0	RESERVED	1111 1111, RW	**RESERVED:** Ignore on read

Table 8-40. Cable Diagnostic Specific Control Register 4 (CDSCR4), address 0x0177

BIT	BIT NAME	DEFAULT	DESCRIPTION
15:13	RESERVED	000, RW	**RESERVED:** Ignore on read
12:8	Short cables TH	1 1000, RW	TH to compensate for strong reflections in short cables
7:0	RESERVED	1001 0110, RW	**RESERVED:** Ignore on read

8.7.3 Cable Diagnostic Location Results Register 1 (CDLRR1)

This register provides the peaks locations after execution of the TDR. The values of this register are valid after reading 1 in Diagnostic Done bit 1 in register CDCR (0x1E).

Table 8-41. Cable Diagnostic Location Results Register 1 (CDLRR1), address 0x0180

BIT	NAME	DEFAULT	FUNCTION
15:8	TPTD Peak Location 2	0000 0000, RO	Location of the **Second** peak discovered by the TDR mechanism on Transmit Channel (TPTD). The value of these bits is translated into distance from the PHY
7:0	TPTD Peak Location 1	0000 0000, RO	Location of the **First** peak discovered by the TDR mechanism on Transmit Channel (TPTD). The value of these bits is translated into distance from the PHY

8.7.4 Cable Diagnostic Location Results Register 2 (CDLRR2)

This register provides the peaks locations after execution of the TDR. The values of this register are valid after reading 1 in Diagnostic Done bit 1 in register CDCR (0x1E).

Table 8-42. Cable Diagnostic Location Results Register 2 (CDLRR2), address 0x0181

BIT	NAME	DEFAULT	FUNCTION
15:8	TPTD Peak Location 4	0000 0000, RO	Location of the **Fourth** peak discovered by the TDR mechanism on Transmit Channel (TPTD). The value of these bits is translated into distance from the PHY.
7:0	TPTD Peak Location 3	0000 0000, RO	Location of the **Third** peak discovered by the TDR mechanism on Transmit Channel (TPTD). The value of these bits is translated into distance from the PHY.

Copyright © 2011–2014, Texas Instruments Incorporated

8.7.5 Cable Diagnostic Location Results Register 3 (DDLRR3)

This register provides the peaks locations after execution of the TDR. The values of this register are valid after reading 1 in Diagnostic Done bit 1 in register CDCR (0x1E).

Table 8-43. Cable Diagnostic Location Results Register 3 (DDLRR3), address 0x0182

BIT	NAME	DEFAULT	FUNCTION
15:8	TPRD Peak Location 1	0000 0000, RO	Location of the **First** peak discovered by the TDR mechanism on Receive Channel (TPRD). The value of these bits is translated into distance from the PHY.
7:0	TPTD Peak Location 5	0000 0000, RO	Location of the **Fifth** peak discovered by the TDR mechanism on Transmit Channel (TPTD). The value of these bits is translated into distance from the PHY.

8.7.6 Cable Diagnostic Location Results Register 4 (CDLRR4)

This register provides the peaks locations after execution of the TDR. The values of this register are valid after reading 1 in Diagnostic Done bit 1 in register CDCR (0x1E).

Table 8-44. Cable Diagnostic Location Results Register 4 (CDLRR4), address 0x0183

BIT	NAME	DEFAULT	FUNCTION
15:8	TPRD Peak Location 3	0000 0000, RO	Location of the **Third** peak discovered by the TDR mechanism on Receive Channel (TPRD). The value of these bits is translated into distance from the PHY.
7:0	TPRD Peak Location 2	0000 0000, RO	Location of the **Second** peak discovered by the TDR mechanism on Receive Channel (TPRD). The value of these bits is translated into distance from the PHY.

8.7.7 Cable Diagnostic Location Results Register 5 (CDLRR5)

This register provides the peaks locations after execution of the TDR. The values of this register are valid after reading 1 in Diagnostic Done bit 1 in register CDCR (0x1E).

Table 8-45. Cable Diagnostic Location Results Register 5 (CDLRR5), address 0x0184

BIT	NAME	DEFAULT	FUNCTION
15:8	TPRD Peak Location 5	0000 0000, RO	Location of the **Fifth** peak discovered by the TDR mechanism on Receive Channel (TPRD). The value of these bits is translated into distance from the PHY.
7:0	TPRD Peak Location 4	0000 0000, RO	Location of the **Fourth** peak discovered by the TDR mechanism on Receive Channel (TPRD). The value of these bits is translated into distance from the PHY.

8.7.8 Cable Diagnostic Amplitude Results Register 1 (CDARR1)

This register provides the peaks amplitude measurement after the execution of the TDR. The values of this register are valid after reading 1 in Diagnostic Done bit 1 in register CDCR (0x1E).

Table 8-46. Cable Diagnostic Amplitude Results Register 1 (CDARR1), address 0x0185

BIT	NAME	DEFAULT	FUNCTION
15	RESERVED	0,RO	**RESERVED:** Writes ignored, read as 0.
14:8	TPTD Peak Amplitude 2	000 0000, RO	Amplitude of the **Second** peak discovered by the TDR mechanism on Transmit Channel (TPTD). The value of these bits is translated into type of cable fault and-or interference. This amplitude value refers to peak location stored in bits [15:8] in register CDLRR1 (0x180)
7	RESERVED	0, RO	**RESERVED:** Writes ignored, read as 0.
6:0	TPTD Peak Amplitude 1	000 0000, RO	Amplitude of the **First** peak discovered by the TDR mechanism on Transmit Channel (TPTD). The value of these bits is translated into type of cable fault and-or interference. This amplitude value refers to peak location stored in bits [7:0] in register CDLRR1 (0x180)

Copyright © 2011–2014, Texas Instruments Incorporated

8.7.9 Cable Diagnostic Amplitude Results Register 2 (CDARR2)

This register provides the peaks amplitude measurement after the execution of the TDR. The values of this register are valid after reading 1 in Diagnostic Done bit 1 in register CDCR (0x1E).

Table 8-47. Cable Diagnostic Amplitude Results Register 2 (CDARR2), address 0x0186

BIT	NAME	DEFAULT	FUNCTION
15	RESERVED	0,RO	**RESERVED:** Writes ignored, read as 0.
14:8	TPTD Peak Amplitude 4	000 0000, RO	Amplitude of the **Fourth** peak discovered by the TDR mechanism on Transmit Channel (TPTD). The value of these bits is translated into type of cable fault and-or interference. This amplitude value refers to peak location stored in bits [15:8] in register CDLRR2 (0x181)
7	RESERVED	0, RO	**RESERVED:** Writes ignored, read as 0.
6:0	TPTD Peak Amplitude 3	000 0000, RO	Amplitude of the **Third** peak discovered by the TDR mechanism on Transmit Channel (TPTD). The value of these bits is translated into type of cable fault and-or interference. This amplitude value refers to peak location stored in bits [7:0] in register CDLRR2 (0x181)

8.7.10 Cable Diagnostic Amplitude Results Register 3 (CDARR3)

This register provides the peaks amplitude measurement after the execution of the TDR. The values of this register are valid after reading 1 in Diagnostic Done bit 1 in register CDCR (0x1E).

Table 8-48. Cable Diagnostic Amplitude Results Register 3 (CDARR3), address 0x0187

BIT	NAME	DEFAULT	FUNCTION
15	RESERVED	0, RO	**RESERVED:** Writes ignored, read as 0.
14:8	TPRD Peak Amplitude 1	000 0000, RO	Amplitude of the **First** peak discovered by the TDR mechanism on Receive Channel (TPRD). The value of these bits is translated into type of cable fault and-or interference. This amplitude value refers to peak location stored in bits [15:8] in register CDLRR3 (0x182)
7	RESERVED	0, RO	**RESERVED:** Writes ignored, read as 0.
6:0	TPTD Peak Amplitude 5	000 0000, RO	Amplitude of the **Fifth** peak discovered by the TDR mechanism on Transmit Channel (TPTD). The value of these bits is translated into type of cable fault and-or interference. This amplitude value refers to peak location stored in bits [7:0] in register CDLRR3 (0x182)

Copyright © 2011–2014, Texas Instruments Incorporated

8.7.11 Cable Diagnostic Amplitude Results Register 4 (CDARR4)

This register provides the peaks amplitude measurement after the execution of the TDR. The values of this register are valid after reading 1 in Diagnostic Done bit 1 in register CDCR (0x1E).

Table 8-49. Cable Diagnostic Amplitude Results Register 4 (CDARR4), address 0x0188

BIT	NAME	DEFAULT	FUNCTION
15	RESERVED	0, RO	**RESERVED:** Writes ignored, read as 0.
14:8	TPRD Peak Amplitude 3	000 0000, RO	Amplitude of the **Third** peak discovered by the TDR mechanism on Receive Channel (TPRD). The value of these bits is translated into type of cable fault and-or interference. This amplitude value refers to peak location stored in bits [15:8] in register CDLRR4 (0x183)
7	RESERVED	0, RO	**RESERVED:** Writes ignored, read as 0.
6:0	TPRD Peak Amplitude 2	000 0000, RO	Amplitude of the **Second** peak discovered by the TDR mechanism on Receive Channel (TPRD). The value of these bits is translated into type of cable fault and-or interference. This amplitude value refers to peak location stored in bits [7:0] in register CDLRR4 (0x183)

8.7.12 Cable Diagnostic Amplitude Results Register 5 (CDARR5)

This register provides the peaks amplitude measurement after the execution of the TDR. The values of this register are valid after reading 1 in Diagnostic Done bit 1 in register CDCR (0x1E).

Table 8-50. Cable Diagnostic Amplitude Results Register 5 (CDARR5), address 0x0189

BIT	NAME	DEFAULT	FUNCTION
15	RESERVED	0, RO	**RESERVED:** Writes ignored, read as 0.
14:8	TPRD Peak Amplitude 5	000 0000, RO	Amplitude of the **Fifth** peak discovered by the TDR mechanism on Receive Channel (TPRD). The value of these bits is translated into type of cable fault and-or interference. This amplitude value refers to peak location stored in bits [15:8] in register CDLRR4 (0x184)
7	RESERVED	0, RO	**RESERVED:** Writes ignored, read as 0.
6:0	TPRD Peak Amplitude 4	000 0000, RO	Amplitude of the **Fourth** peak discovered by the TDR mechanism on Receive Channel (TPRD). The value of these bits is translated into type of cable fault and-or interference. This amplitude value refers to peak location stored in bits [7:0] in register CDLRR4 (0x184)

8.7.13 Cable Diagnostic General Results Register (CDGRR)

This register provides general measurement results after the execution of the TDR. The Cable Diagnostic software should post process this result together with other Peaks' location and amplitude results.

Table 8-51. Cable Diagnostic General Results Register (CDGRR), address 0x018A

BIT	NAME	DEFAULT	FUNCTION
15	TPTD Peak Polarity 5	0, RO	Polarity of the **Fifth** peak discovered by the TDR mechanism on Transmit Channel (TPTD)
14	TPTD Peak Polarity 4	0, RO	Polarity of the **Fourth** peak discovered by the TDR mechanism on Transmit Channel (TPTD)
13	TPTD Peak Polarity 3	0, RO	Polarity of the **Third** peak discovered by the TDR mechanism on Transmit Channel (TPTD)
12	TPTD Peak Polarity 2	0, RO	Polarity of the **Second** peak discovered by the TDR mechanism on Transmit Channel (TPTD)
11	TPTD Peak Polarity 1	0, RO	Polarity of the **First** peak discovered by the TDR mechanism on Transmit Channel (TPTD)
10	TPRD Peak Polarity 5	0, RO	Polarity of the **Fifth** peak discovered by the TDR mechanism on Receive Channel (TPRD)
9	TPRD Peak Polarity 4	0, RO	Polarity of the **Fourth** peak discovered by the TDR mechanism on Receive Channel (TPRD)
8	TPRD Peak Polarity 3	0, RO	Polarity of the **Third** peak discovered by the TDR mechanism on Receive Channel (TPRD)
7	TPRD Peak Polarity 2	0, RO	Polarity of the **Second** peak discovered by the TDR mechanism on Receive Channel (TPRD)
6	TPRD Peak Polarity 1	0, RO	Polarity of the **First** peak discovered by the TDR mechanism on Receive Channel (TPRD)
5	Cross Detect on TPTD	0, RO	Cross Reflection were detected on TPTD. Indicate on Short between TPTD and TPRD
4	Cross Detect on TPRD	0, RO	Cross Reflection were detected on TPRD. Indicate on Short between TPTD and TPRD

Copyright © 2011–2014, Texas Instruments Incorporated

Table 8-51. Cable Diagnostic General Results Register (CDGRR), address 0x018A (continued)

BIT	NAME	DEFAULT	FUNCTION
3	Above 5 TPTD Peaks	0, RO	More than 5 reflections were detected on TPTD
2	Above 5 TPRD Peaks	0, RO	More than 5 reflections were detected on TPRD
1:0	RESERVED	00, RO	**RESERVED:** Writes ignored, read as 0

8.7.14 ALCD Control and Results 2 (ALCDRR2)

Table 8-52. ALCD Control and Results 2 (ALCDRR2), address 0x0215

BIT	BIT NAME	DEFAULT	DESCRIPTION
15:12	alcd_out2	0011, SC	
11:0	alcd_out3	0110 0000 0000, RW	alcd_out3

9 Electrical Specifications

All parameters are derived by test, statistical analysis, or design.

9.1 ABSOLUTE MAXIMUM RATINGS(1)

			VALUE	UNIT
VDD_IO, AVDD33	Supply voltage		–0.3 to 3.8	V
PFBIN1, PFBIN2			–0.3 to 1.8	
XI	DC Input voltage		–0.3 to 3.8	V
TD-, TD+, RD-, RD+			–0.3 to 6	
Other Inputs			–0.3 to 3.8	
XO	DC Output voltage		–0.3 to 3.8	V
Other outputs			–0.3 to 3.8	
T_J	Maximum die temperature		125	°C
T_S	Storage Temperature		–65 to 150	°C
ESD	Human-Body Model	All pins(2)	±4	kV
		Ethernet network pins (TD+, TD-, RD+, RD-)(3)	±16	
	Charged-Device Model	All pins(4)	±750	V

(1) Stresses beyond those listed under "absolute maximum ratings" may cause permanent damage to the device. These are stress ratings only, and functional operation of the device at these or any other conditions beyond those indicated under "recommended operating conditions" is not implied. Exposure to absolute-maximum-rated conditions for extended periods may affect device reliability.
(2) Tested in accordance to JEDEC Standard 22, Test Method A114.
(3) Test method based upon JEDEC Standard 22 Test Method A114, Ethernet network pins (TD+, TD-, RD+, RD-) pins stressed with respect to GND.
(4) Tested in accordance to JEDEC Standard 22, Test Method C101.

9.2 RECOMMENDED OPERATING CONDITIONS

			MIN	NOM	MAX	UNIT
Dual Supply Operation						
	Core Supply voltage (PFBIN1, PFBIN2)		1.48	1.55	1.68	V
P_D	Power dissipation(1)			200		mW
Single Supply Operation						
	(PFBOUT connected to PFBIN1, PFBIN2 See Figure 3-1)					
P_D	Power dissipation(2)			270		mW
AVDD33	Analog 3.3V Supply		3.0	3.3	3.6	V
VDD_IO	3.3V Option		3.0	3.3	3.6	V
	2.5V Option		2.25	2.5	2.75	
	1.8V Option (MII Mode only)		1.62	1.8	1.98	
T_A	Ambient temperature	TLK110PT	–40		85	°C
P_D	Power dissipation(2)		200		mW	

(1) For 100Base-TX
(2) For 100Base-TX, When internal 1.55V is used. Device is operated from single 3.3V supply only.

9.3 48-Pin Industrial Device Thermal Characteristics

over operating free-air temperature range (unless otherwise noted)

PARAMETER		CONDITIONS	MIN	TYP	MAX	UNIT
θ_{JA}	Junction-to-ambient thermal resistance (no airflow)	JEDEC high-K model		65.3		°C/W
θ_{JB}	Junction-to-board thermal resistance			28.5		
θ_{JC}	Junction-to-case thermal resistance			23.1		

Copyright © 2011–2014, Texas Instruments Incorporated

9.4 DC CHARACTERISTICS, VDD_IO

over operating free-air temperature range (unless otherwise noted)

PARAMETER		TEST CONDITIONS		MIN	TYP	MAX	UNIT
3.3V VDD_IO							
V_{IH}	Input high voltage	Nominal VCC = 3.3V	VDD_IO = 3.3V ±10%	2.0			V
V_{IL}	Input low voltage		VDD_IO = 3.3V±10%			0.8	V
V_{OL}	Output low voltage	I_{OL} = 4 mA	VDD_IO = 3.3V±10%			0.4	V
V_{OH}	Output high voltage	I_{OH} = –4 mA	VDD_IO = 3.3V±10%	VDD_IO – 0.5			V
2.5V VDD_IO							
V_{IH}	Input high voltage		VDD_IO = 2.5V±10%	1.5			V
V_{IL}	Input low voltage		VDD_IO = 2.5V±10%			0.5	V
V_{OL}	Output low voltage	I_{OL} = 2 mA	VDD_IO = 2.5V±10%			0.4	V
V_{OH}	Output high voltage	I_{OH} = –2 mA	VDD_IO = 2.5V±10%	VDD_IO – 0.4			V
1.8V VDD_IO							
V_{IH}	Input high voltage		VDD_IO = 1.8V±10%	1.3			V
V_{IL}	Input low voltage		VDD_IO = 1.8V±10%			0.45	V
V_{OL}	Output low voltage	I_{OL} = 2 mA	VDD_IO = 1.8V±10%			0.4	V
V_{OH}	Output high voltage	I_{OH} = –2 mA	VDD_IO = 1.8V±10%	VDD_IO – 0.4			V

9.5 DC CHARACTERISTICS

over operating free-air temperature range (unless otherwise noted)

PARAMETER		TEST CONDITIONS	MIN	TYP	MAX	UNIT
I_{IH}	Input high current	$V_{IN} = V_{CC}$			10	µA
I_{IL}	Input low current	V_{IN} = GND			10	µA
I_{OZ}	3-State leakage	$V_{OUT} = V_{CC}$, V_{OUT} = GND			±10	µA
R_{PULLUP}	Integrated Pullup Resistance		14.7	23.7	49.7	kΩ
$R_{PULLDOWN}$	Integrated Pulldown Resistance		14.5	24.9	48.1	kΩ
V_{TPTD_100}	100M transmit voltage		0.95	1	1.05	V
$V_{TPTDsym}$	100M transmit voltage symmetry				±2%	
V_{TPTD_10}	10M transmit voltage		2.2	2.5	2.8	V
C_{IN1}	CMOS input capacitance			5		pF
C_{OUT1}	CMOS output capacitance			5		pF
V_{TH1}	10Base-T Receive threshold			200		mV

Copyright © 2011–2014, Texas Instruments Incorporated

9.6 Power Supply Characteristics

The data was measured using a TLK110 evaluation board. The current from each of the power supplies is measured and the power dissipation is computed. For the single 3.3V external supply case the power dissipation across the internal linear regulator is also included. All the power dissipation numbers are measured at the nominal power supply and typical temperature of 25°C. The power needed is given both for the device only, and including the center tap of the transformer for a total system power requirement. The center tap of the transformer is normally connected to the 3.3V supply, thus the current needed may also be easily calculated.

9.6.1 Active Power, Single Supply Operation

PARAMETER	TEST CONDITIONS	FROM POWER PINS	FROM TRANSFORMER CENTER TAP	UNIT
100Base-TX /W Traffic (full packet 1518B rate)	Single 3.3V external supply	203	73	mW
10Base-T /W Traffic (full packet 1518B rate)		96	211	

9.6.2 Active Power, Dual Supply Operation

PARAMETER	TEST CONDITIONS	FROM 3.3V POWER	FROM 1.55V PFBIN1, PFBIN2	FROM TRANSFORMER CENTER TAP	UNIT
100Base-TX /W Traffic (full packet 1518B rate)	Dual external supplies, 3.3V and 1.55V	53	73	73	mW
10Base-T /W Traffic (full packet 1518B rate)		23	35	212	

9.6.3 Power-Down Power

PARAMETER	TEST CONDITIONS (1)	FROM 3.3V POWER	FROM 1.55V PFBIN1, PFBIN2	FROM TRANSFORMER CENTER TAP	UNIT
IEEE PWDN	Single 3.3V external supply	12	–	5	mW
Passive Sleep Mode		71	–	5	
Active Sleep Mode		71	–	5	
IEEE PWDN	Dual external supplies, 3.3V and 1.55V	12	0	5	
Passive Sleep Mode		21	23	5	
Active Sleep Mode		21	23	5	

(1) Measured under typical conditions.

Copyright © 2011–2014, Texas Instruments Incorporated

9.7 AC Specifications

9.7.1 Power Up Timing

Table 9-1. Power Up Timing

PARAMETER		TEST CONDITIONS	MIN	TYP	MAX	UNIT
t_1	Time from powerup to hardware-configuration pin transition to output-driver function, using internal POR ($\overline{RESET}$ pin tied high)		100	270		ms

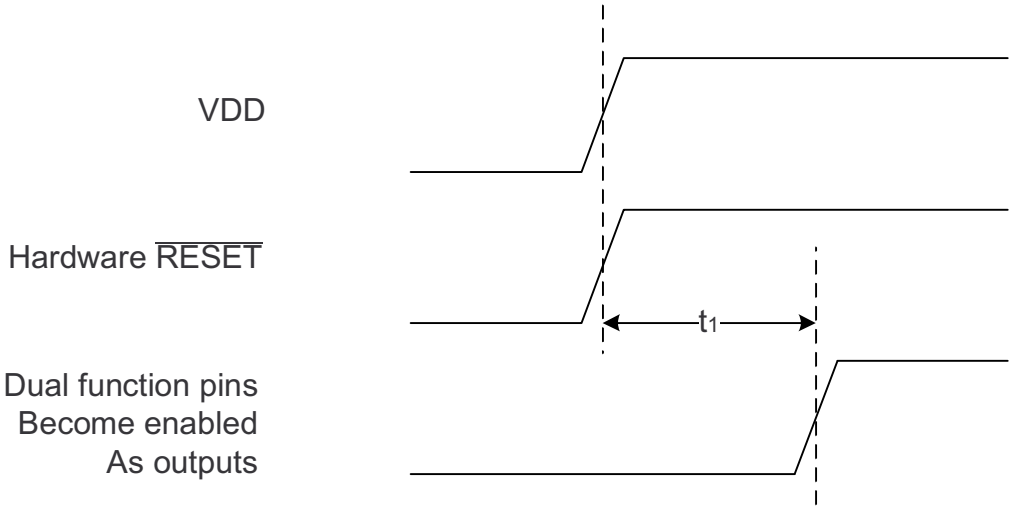

Figure 9-1. Power Up Timing

NOTE

It is important to choose pullup and-or pulldown resistors for each of the hardware configuration pins that provide fast RC time constants in order to latch in the proper value prior to the pin transitioning to an output driver.

9.7.2 Reset Timing

Table 9-2. Reset Timing

PARAMETER		TEST CONDITIONS	MIN	TYP	MAX	UNIT
t_1	RESET pulse width	XI Clock must be stable for minimum of 1µs during RESET pulse low time.	1			µs

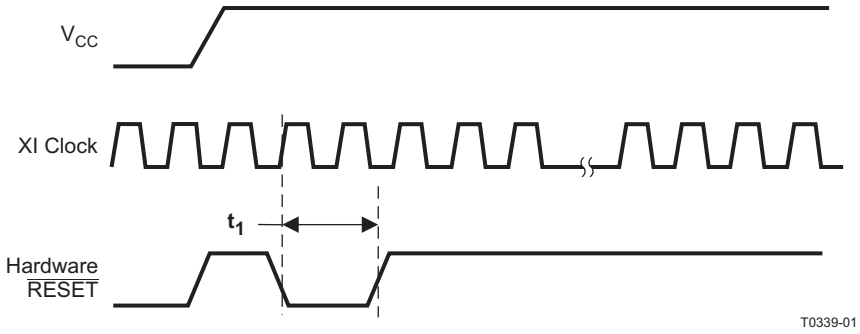

Figure 9-2. Reset Timing

9.7.3 MII Serial Management Timing

Table 9-3. MII Serial Management Timing

PARAMETER		TEST CONDITIONS	MIN	TYP	MAX	UNIT
t_1	MDC Frequency			2.5	25	MHz
t_2	MDC to MDIO (Output) Delay Time		0		30	ns
t_3	MDIO (Input) to MDC Hold Time		10			ns
t_4	MDIO (Input) to MDC Setup Time		10			ns

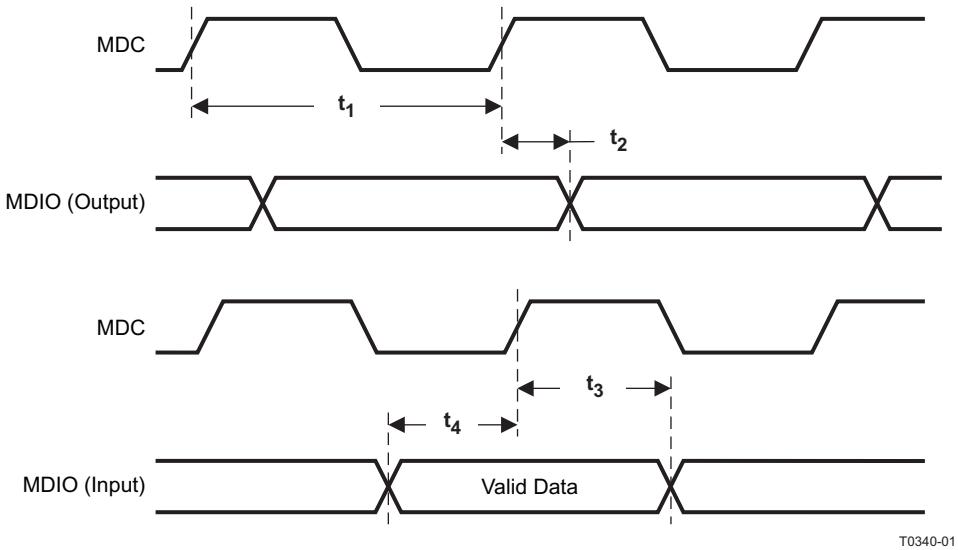

Figure 9-3. MII Serial Management Timing

9.7.4 100Mb/s MII Transmit Timing

Table 9-4. 100Mb/s MII Transmit Timing

PARAMETER		TEST CONDITIONS	MIN	TYP	MAX	UNIT
t_1	TX_CLK High Time	100Mbs Normal mode	16	20	24	ns
t_2	TX_CLK Low Time					
t_3	TXD[3:0], TX_EN Data Setup to TX_CLK	100Mbs Normal mode	10			ns
t_4	TXD[3:0], TX_EN Data Hold from TX_CLK	100Mbs Normal mode	0			ns

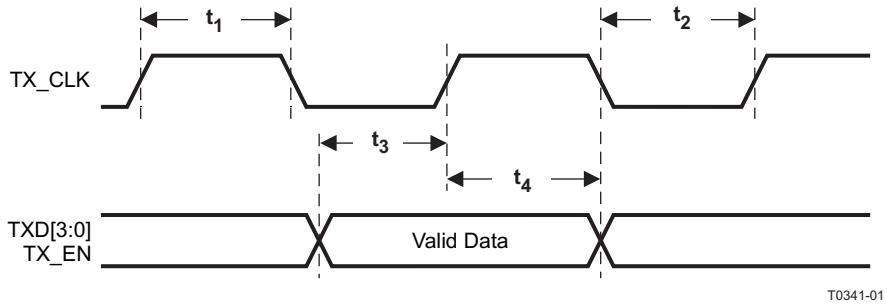

Figure 9-4. 100Mb/s MII Transmit Timing

Copyright © 2011–2014, Texas Instruments Incorporated

9.7.5 100Mb/s MII Receive Timing

Table 9-5. 100Mb/s MII Receive Timing

PARAMETER(1)		TEST CONDITIONS	MIN	TYP	MAX	UNIT
t_1	RX_CLK High Time	100Mbs Normal mode	16	20	24	ns
t_2	RX_CLK Low Time					
t_3	RX_CLK to RXD[3:0], RX_DV, RX_ER Delay	100Mbs Normal mode	10		30	ns

(1) RX_CLK may be held low or high for a longer period of time during transition between reference and recovered clocks. Minimum high and low times will not be violated.

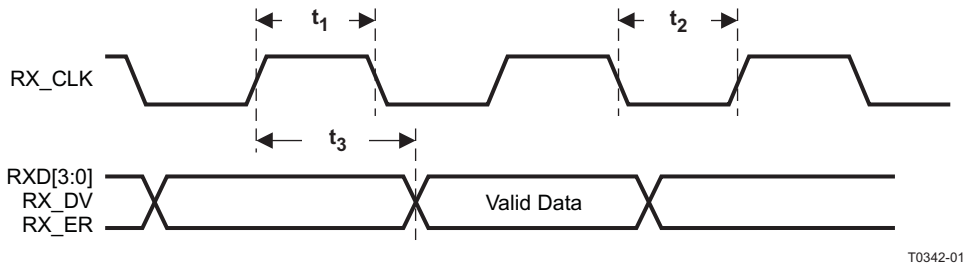

Figure 9-5. 100Mb/s MII Receive Timing

9.7.6 100Base-TX Transmit Packet Latency Timing

Table 9-6. 100Base-TX Transmit Packet Latency Timing

PARAMETER		TEST CONDITIONS	MIN	TYP	MAX	UNIT
t_1	TX_CLK to PMD Output Pair Latency	100Mbs Normal mode(1)		4.8		bits(2)

(1) For Normal mode, latency is determined by measuring the time from the first rising edge of TX_CLK occurring after the assertion of TX_EN to the first bit of the 'J' code group as output from the PMD Output Pair. 1 bit time = 10ns in 100Mbs mode.
(2) 1 bit time is equal 10 nS in 100 Mb/s mode.

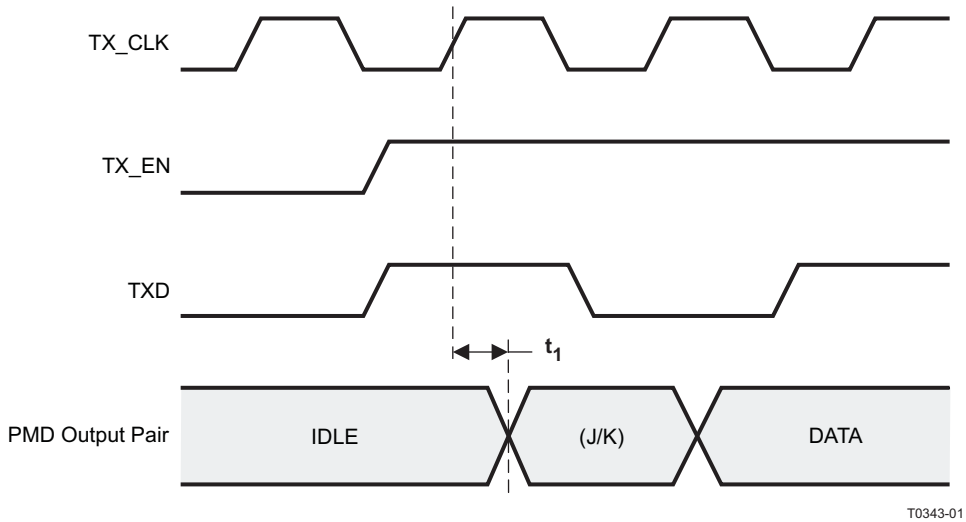

Figure 9-6. 100Base-TX Transmit Packet Latency Timing

9.7.7 100Base-TX Transmit Packet Deassertion Timing

Table 9-7. 100Base-TX Transmit Packet Deassertion Timing

PARAMETER		TEST CONDITIONS	MIN	TYP	MAX	UNIT
t_1	TX_CLK to PMD Output Pair deassertion	100Mbs Normal mode		4.6		bits

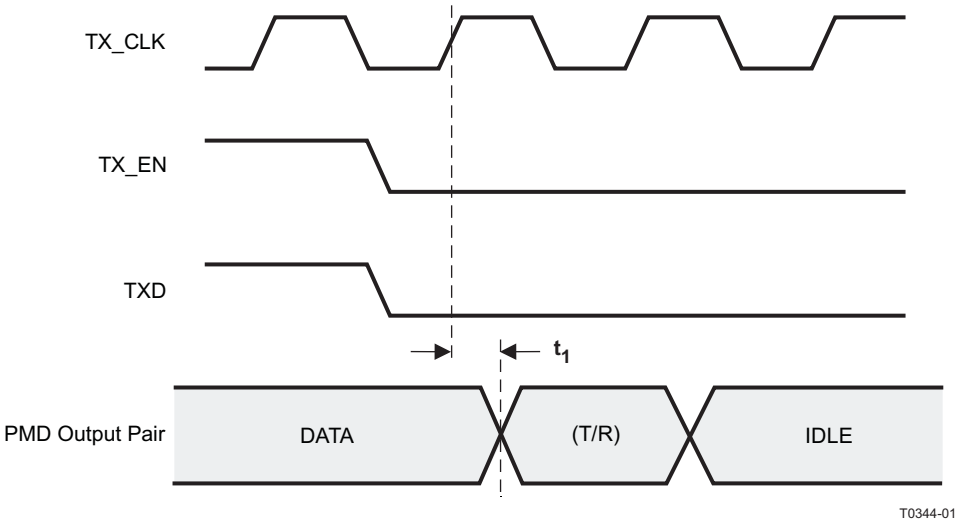

Figure 9-7. 100Base-TX Transmit Packet Deassertion Timing

Copyright © 2011–2014, Texas Instruments Incorporated

9.7.8 100Base-TX Transmit Timing ($t_{R/F}$ and Jitter)

Table 9-8. 100Base-TX Transmit Timing ($t_{R/F}$ and Jitter)

PARAMETER		TEST CONDITIONS	MIN	TYP	MAX	UNIT
t_1	100Mbs PMD Output Pair t_R and t_F (1)		3	4	5	ns
	100Mbs t_R and t_F Mismatch (2)				500	ps
t_2	100Mbs PMD Output Pair Transmit Jitter				1.4	ns

(1) Rise and fall times taken at 10% and 90% of the +1 or -1 amplitude.
(2) Normal Mismatch is the difference between the maximum and minimum of all rise and fall times.

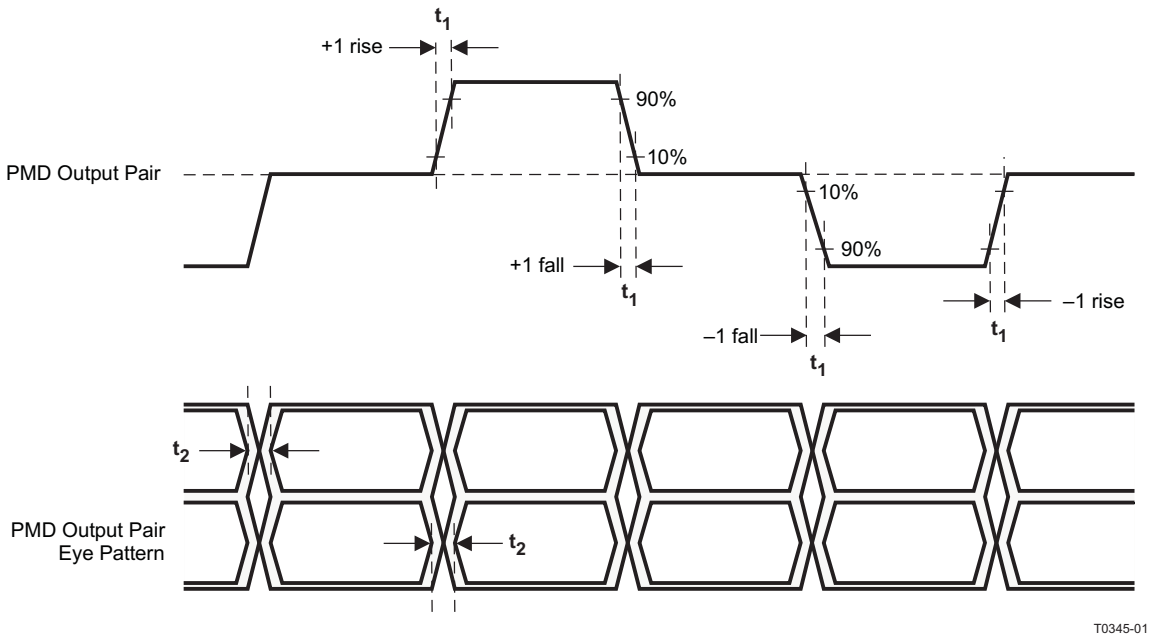

Figure 9-8. 100Base-TX Transmit Timing ($t_{R/F}$ and Jitter)

9.7.9 100Base-TX Receive Packet Latency Timing

Table 9-9. 100Base-TX Receive Packet Latency Timing

PARAMETER		TEST CONDITIONS (1)	MIN	TYP	MAX	UNIT (2)
t_1	Carrier Sense ON Delay (3)	100Mbs Normal mode		14		bits
t_2	Receive Data Latency	100Mbs Normal mode		19		bits
t_2	Receive data latency (4)	100Mb normal mode with fast RXDV detection ON		15		bits

(1) PMD Input Pair voltage amplitude is greater than the Signal Detect Turn-On Threshold Value.
(2) 1 bit time = 10 ns in 100Mbs mode
(3) Carrier Sense On Delay is determined by measuring the time from the first bit of the "J" code group to the assertion of Carrier Sense.
(4) Fast RXDV detection could be enabled by setting bit[1] of SWSCR1 (address 0x0009).

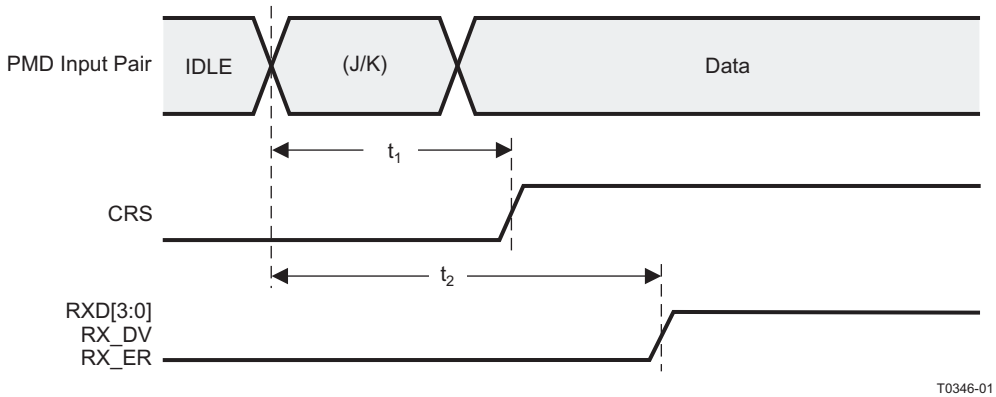

Figure 9-9. 100Base-TX Receive Packet Latency Timing

9.7.10 100Base-TX Receive Packet Deassertion Timing

Table 9-10. 100Base-TX Receive Packet Deassertion Timing

PARAMETER		TEST CONDITIONS	MIN	TYP	MAX	UNIT
t_1	Carrier Sense OFF Delay (1)	100Mbs Normal mode		19		bits (2)

(1) Carrier Sense Off Delay is determined by measuring the time from the first bit of the "T" code group to the deassertion of Carrier Sense.
(2) 1 bit time = 10 ns in 100Mbs mode

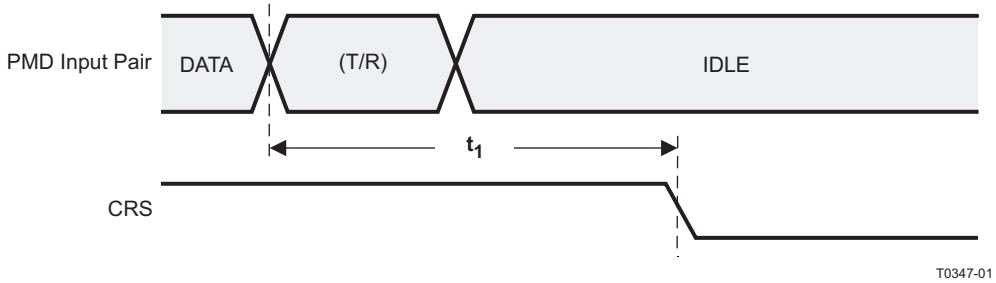

Figure 9-10. 100Base-TX Receive Packet Deassertion Timing

Copyright © 2011–2014, Texas Instruments Incorporated

9.7.11 10Mbs MII Transmit Timing

Table 9-11. 10Mbs MII Transmit Timing

PARAMETER		TEST CONDITIONS	MIN	TYP	MAX	UNIT
t_1	TX_CLK Low Time	10Mbs MII mode	190	200	210	ns
t_2	TX_CLK High Time					
t_3	TXD[3:0], TX_EN Data Setup to TX_CLK ↑	10Mbs MII mode	25			ns
t_4	TXD[3:0], TX_EN Data Hold from TX_CLK ↑	10Mbs MII mode	0			ns

An attached Mac should drive the transmit signals using the positive edge of TX_CLK. As shown in Figure 9-11, the MII signals are sampled on the falling edge of TX_CLK.

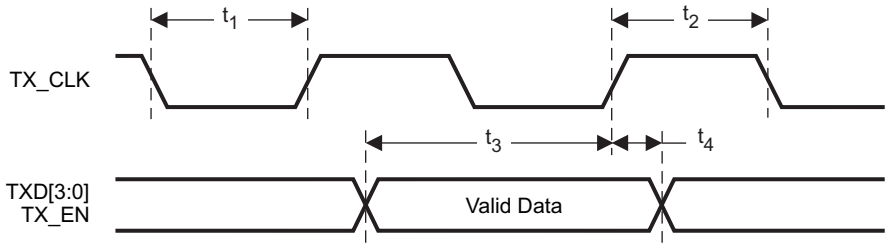

Figure 9-11. 10Mbs MII Transmit Timing

9.7.12 10Mb/s MII Receive Timing

Table 9-12. 10Mb/s MII Receive Timing

PARAMETER(1)		TEST CONDITIONS	MIN	TYP	MAX	UNIT
t_1	RX_CLK High Time		160	200	240	ns
t_2	RX_CLK Low Time					
t_3	RX_CLK rising edge delay from RXD[3:0], RX_DV Valid	10Mbs MII mode	100			ns
t_4	RX_CLK to RXD[3:0], RX_DV Delay	10Mbs MII mode	100			ns

(1) RX_CLK may be held low for a longer period of time during transition between reference and recovered clocks. Minimum high and low times will not be violated.

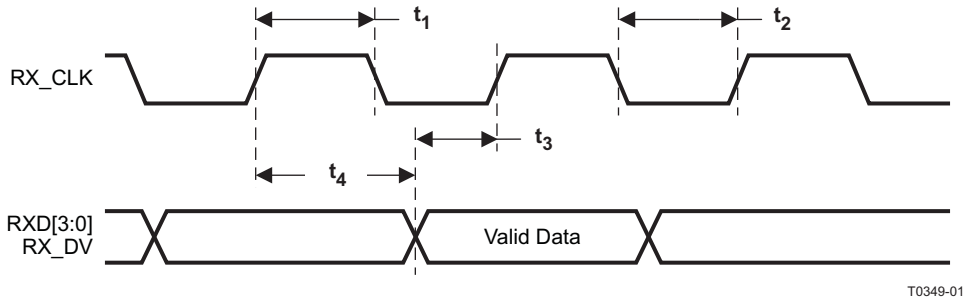

Figure 9-12. 10Mb/s MII Receive Timing

9.7.13 10Base-T Transmit Timing (Start of Packet)

Table 9-13. 10Base-T Transmit Timing (Start of Packet)

PARAMETER		TEST CONDITIONS	MIN	TYP	MAX	UNIT(1)
t_1	Transmit Output Delay from the Falling Edge of TX_CLK	10Mbs MII mode		5.8		bits

(1) (1) 1 bit time = 100ns in 10Mb/s.

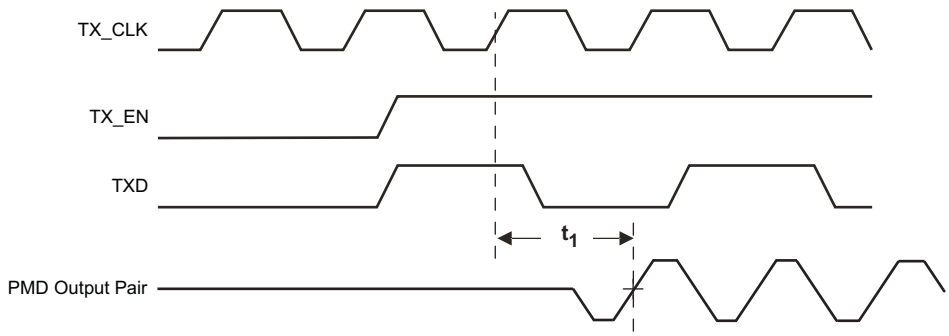

Figure 9-13. 10Base-T Transmit Timing (Start of Packet)

9.7.14 10Base-T Transmit Timing (End of Packet)

Table 9-14. 10Base-T Transmit Timing (End of Packet)

PARAMETER		TEST CONDITIONS	MIN	TYP	MAX	UNIT
t_1	End of Packet High Time (with ‘0’ ending bit)		250	310		ns
t_2	End of Packet High Time (with ‘1’ ending bit)		250	310		ns

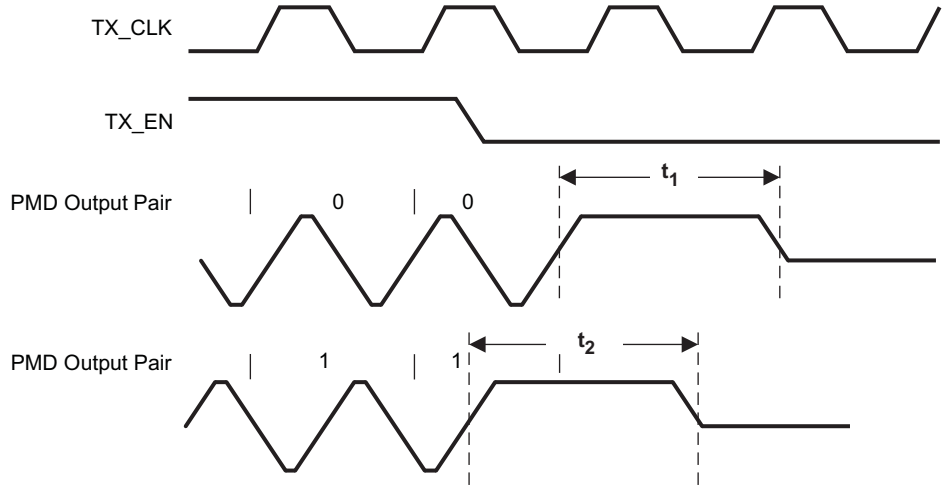

Figure 9-14. 10Base-T Transmit Timing (End of Packet)

Copyright © 2011–2014, Texas Instruments Incorporated

9.7.15 10Base-T Receive Timing (Start of Packet)

Table 9-15. 10Base-T Receive Timing (Start of Packet)

PARAMETER		TEST CONDITIONS	MIN	TYP	MAX	UNIT
t_1	Carrier Sense Turn On Delay (PMD Input Pair to CRS)			550	1000	ns
t_2	RX_DV Latency(1)			14		bits
t_3	Receive Data Latency	Measurement shown from SFD		14		bits

(1) 10Base-T RX_DV Latency is measured from first bit of decoded SFD on the wire to the assertion of RX_DV

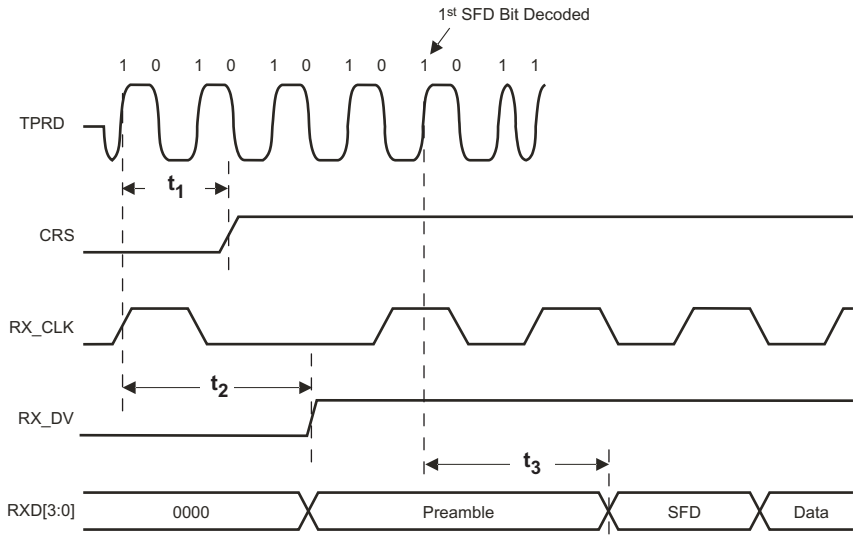

Figure 9-15. 10Base-T Receive Timing (Start of Packet)

9.7.16 10Base-T Receive Timing (End of Packet)

Table 9-16. 10Base-T Receive Timing (End of Packet)

PARAMETER		TEST CONDITIONS	MIN	TYP	MAX	UNIT
t_1	Carrier Sense Turn Off Delay			1.8		µs

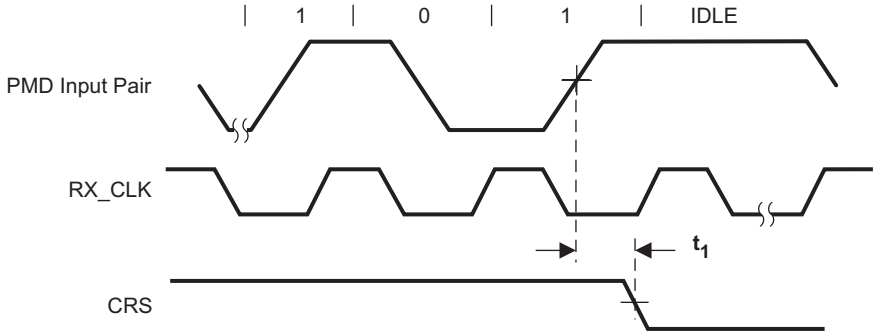

Figure 9-16. 10Base-T Receive Timing (End of Packet)

9.7.17 10Mb/s Jabber Timing

Table 9-17. 10Mb/s Jabber Timing

PARAMETER		TEST CONDITIONS	MIN	TYP	MAX	UNIT
t_1	Jabber Activation Time	10 Mb/s MII mode		100		ms
t_2	Jabber Deactivation Time			500		

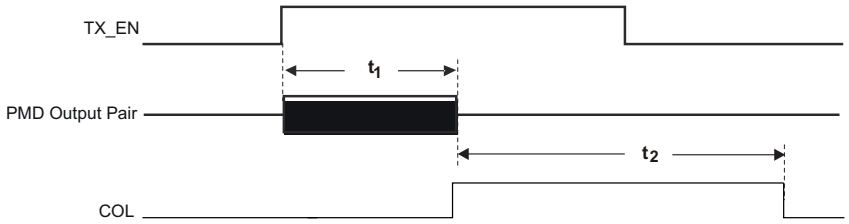

Figure 9-17. 10Mb/s Jabber Timing

9.7.18 10Base-T Normal Link Pulse Timing

Table 9-18. 10Base-T Normal Link Pulse Timing

PARAMETER(1)		TEST CONDITIONS	MIN	TYP	MAX	UNIT
t_1	Pulse Period	10 Mb/s MII mode		16		ms
t_2	Pulse Width			100		ns

(1) Transmit timing

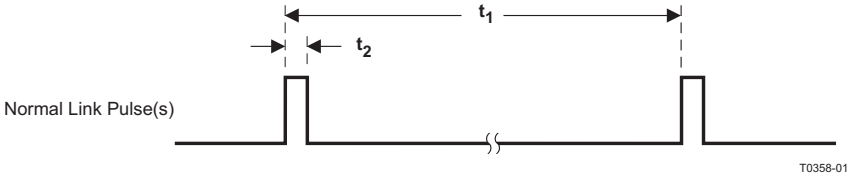

Figure 9-18. 10Base-T Normal Link Pulse Timing

Copyright © 2011–2014, Texas Instruments Incorporated

9.7.19 Auto-Negotiation Fast Link Pulse (FLP) Timing

Table 9-19. Auto-Negotiation Fast Link Pulse (FLP) Timing

PARAMETER		TEST CONDITIONS	MIN	TYP	MAX	UNIT
t_1	Clock Pulse to Clock Pulse Period			125		µs
t_2	Clock Pulse to Data Pulse Period	Data = 1		62		µs
t_3	Clock, Data Pulse Width			114		ns
t_4	FLP Burst to FLP Burst Period			16		ms
t_5	Burst Width			2		ms

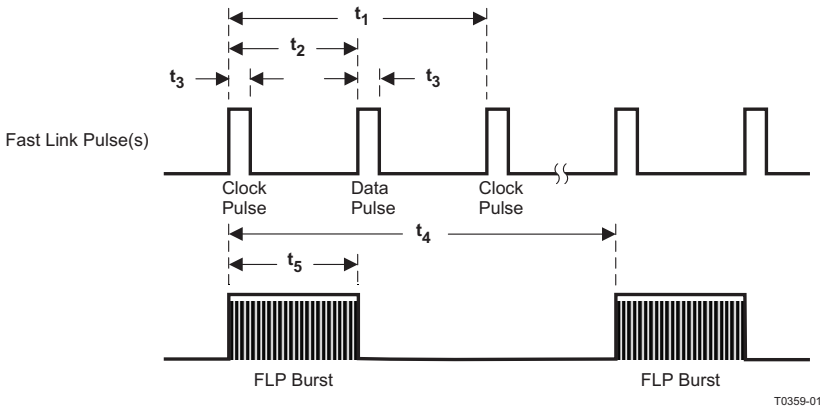

Figure 9-19. Auto-Negotiation Fast Link Pulse (FLP) Timing

9.7.20 100Base-TX Signal Detect Timing

Table 9-20. 100Base-TX Signal Detect Timing

PARAMETER		TEST CONDITIONS	MIN	TYP	MAX	UNIT
t_1	SD Internal Turn-on Time				100	µs
t_2	Internal Turn-off Time				200	µs

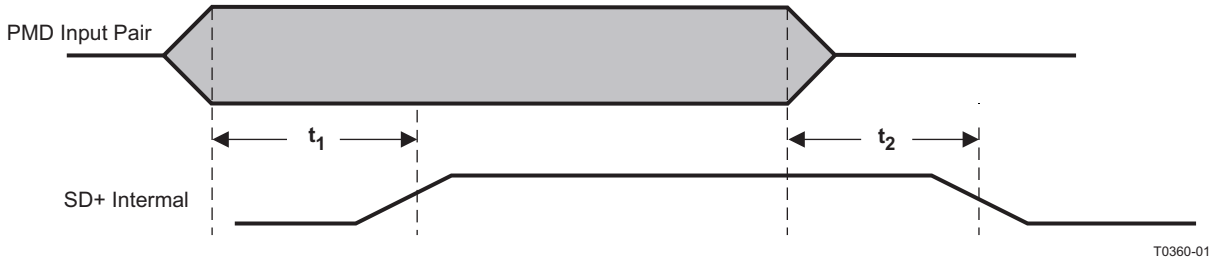

NOTE: The signal amplitude on PMD Input Pair must be TP-PMD compliant.

Figure 9-20. 100Base-TX Signal Detect Timing

9.7.21 100Mbs Loopback Timing

Table 9-21. 100Mbs Loopback Timing

PARAMETER		TEST CONDITIONS	MIN	TYP	MAX	UNIT
t_1	TX_EN to RX_DV Loopback	100Mbs external loopback	241	242	243	ns
		100Mbs external loopback – fast RX_DV mode	201	202	203	
		100Mbs analog loopback	232	233	234	
		100Mbs PCS Input loop back	120	121	122	
		100Mbs MII loop back	8	9	10	

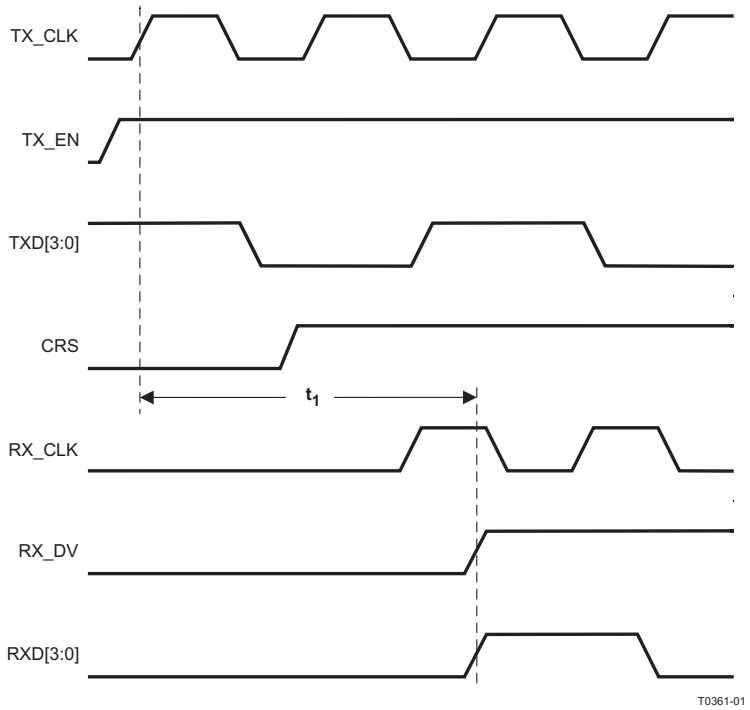

(1) Due to the nature of the descrambler function, all 100Base-TX Loopback modes cause an initial *dead-time* of up to 550 µs during which time no data is present at the receive MII outputs. The 100Base-TX timing specified is based on device delays after the initial 550µs *dead-time*.

(2) Measurement is made from the first rising edge of TX_CLK after assertion of TX_EN.

(3) External loopback was measured using very short external cable (approximately 10cm).

(4) Since MII loopback introduce extreme short roundtrip delay, some hosts would use PCS Input loopback (Mainly in 100BT).

Figure 9-21. 100Mbs Loopback Timing

Copyright © 2011–2014, Texas Instruments Incorporated

9.7.22 10Mbs Internal Loopback Timing

Table 9-22. 10Mbs Internal Loopback Timing

PARAMETER		TEST CONDITIONS	MIN	TYP	MAX	UNIT
t_1	TX_EN to RX_DV Loopback	10Mbs internal loopback mode		1.7		µs

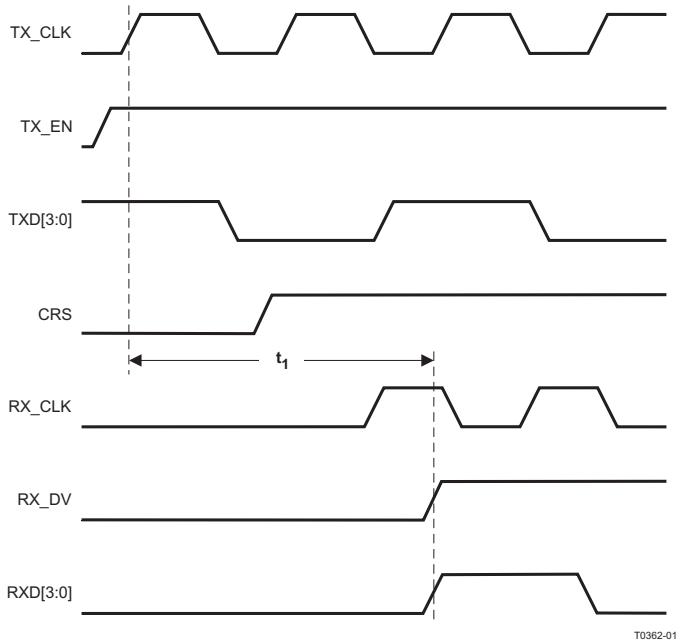

(1) Measurement is made from the first rising edge of TX_CLK after assertion of TX_EN.
(2) Analog loopback was used. Looping the TX to RX at the analog input/output stage.

Figure 9-22. 10Mbs Internal Loopback Timing

9.7.23 RMII Transmit Timing

Table 9-23. RMII Transmit Timing

PARAMETER		TEST CONDITIONS	MIN	TYP	MAX	UNIT
t_1	XI Clock Period	50MHz Reference Clock		20		ns
t_2	TXD[1:0] and TX_EN data setup to X1 rising		1.4			ns
t_3	TXD[1:0] and TX_EN data hold to X1 rising	VDD_IO = 3.3V	2.0			ns
		VDD_IO = 2.5V	4.9			ns
t_4	XI Clock to PMD Output Pair Latency			12		bits

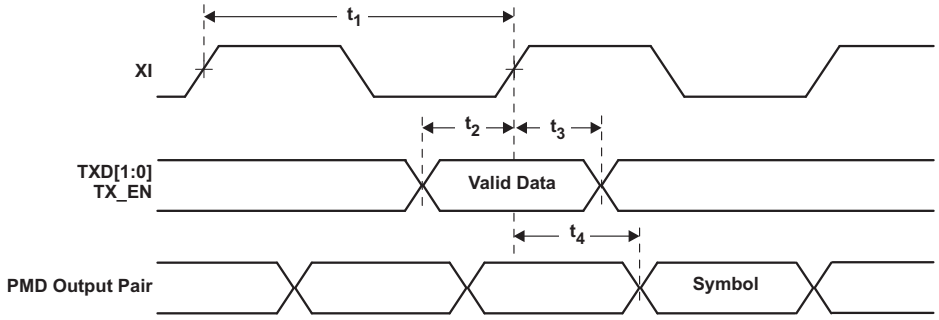

Figure 9-23. RMII Transmit Timing

9.7.24 RMII Receive Timing

Table 9-24. RMII Receive Timing

PARAMETER		TEST CONDITIONS	MIN	TYP	MAX	UNIT
t_1	XI Clock Period	50MHz Reference Clock		20		ns
t_2	RXD[1:0], CRS_DV, RX_DV and RX_ER output delay from XI rising		4	10.8	14	ns
t_3	CRS ON delay	From JK symbol on PMD Receive Pair to initial assertion of CRS_DV		17.6		bits
t_4	CRS OFF delay	From TR symbol on PMD Receive Pair to initial assertion of CRS_DV		26.2		bits
t_5	RXD[1:0] and RX_ER latency	From symbol on Receive Pair. * Elasticity buffer set to default value (01)		29.7		bits
t_6	RX_CLK Clock Period	50MHz “Recovered clock” while working in “RMII receive clock” mode		20		ns
t_7	RXD[1:0], CRS_DV, RX_DV and RX_ER output delay from RX_CLK rising	While working in “RMII receive clock” mode		3.8		ns

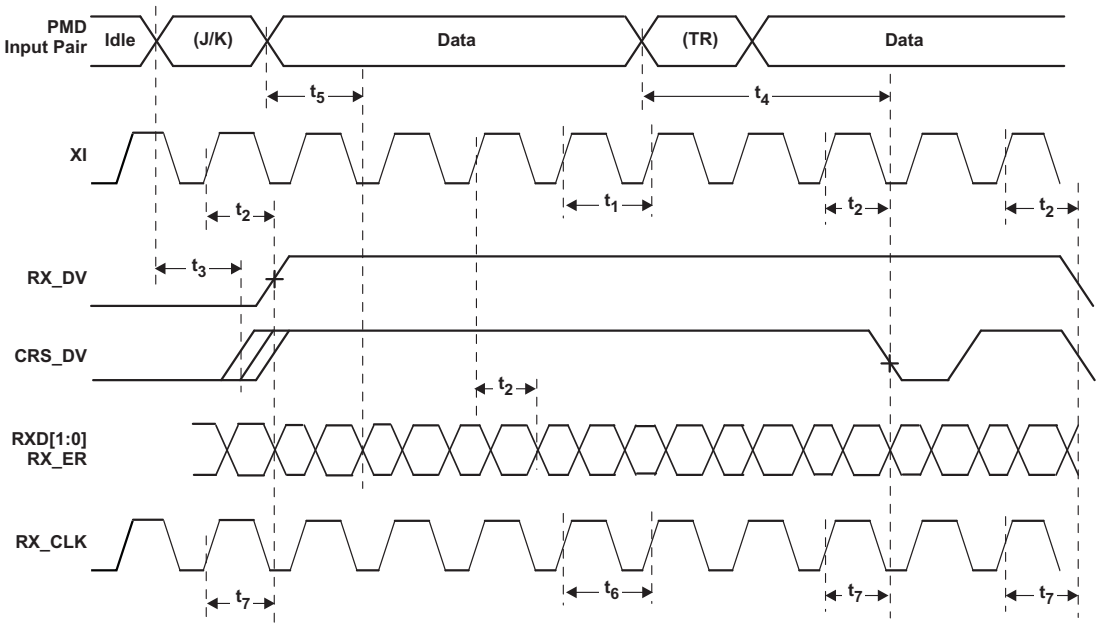

Figure 9-24. RMII Receive Timing

NOTE

1. Per the RMII Specification, output delays assume a 25pF load.
2. CRS_DV is asserted asynchronously in order to minimize latency of control signals through the PHY. CRS_DV may toggle synchronously at the end of the packet to indicate CRS de-assertion.
3. RX_DV is synchronous to XI. While not part of the RMII specification, this signal is provided to simplify recovery of receive data.
4. “RMII receive clock” mode is not part of the RMII specification that allows synchronization of the MAC-PHY RX interface in RMII mode. Setting register 0x000A bit [0] is required to activate this mode.

Copyright © 2011–2014, Texas Instruments Incorporated

9.7.25 Isolation Timing

Table 9-25. Isolation Timing

PARAMETER		TEST CONDITIONS	MIN	TYP	MAX	UNIT
t_1	From Deassertion of S/W or H/W Reset to transition from Isolate to Normal mode			71		ns

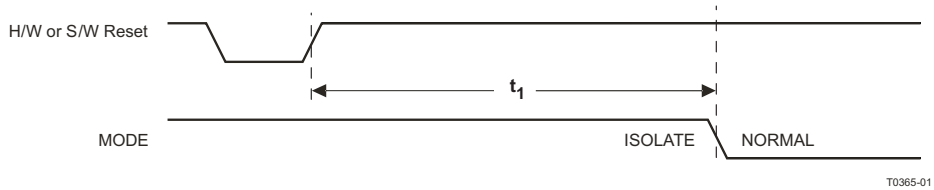

Figure 9-25. Isolation Timing

9.7.26 25MHz_OUT Clock Timing

Table 9-26. 25MHz_OUT Clock Timing

PARAMETER		TEST CONDITIONS	MIN	TYP	MAX	UNIT
t_1	25MHz_OUT(1) propagation delay	Relative to XI			8	ns
t_2	25MHz_OUT(1) High Time	MII mode		20		ns
		RMII mode		10		
t_3	25MHz_OUT(1) Low Time	MII mode		20		
		RMII mode		10		

(1) 25MHz_OUT characteristics are dependent upon the XI input characteristics.

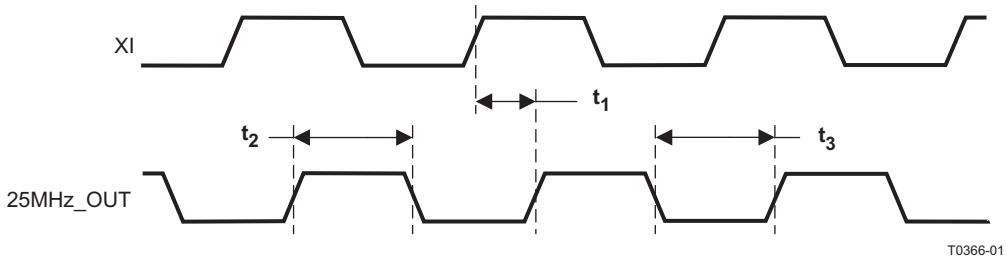

Figure 9-26. 25MHz_OUT Timing

Revision History

NOTE: Page numbers for previous revisions may differ from page numbers in the current version.

Changes from Revision B (October 2012) to Revision C	Page
• Added bullet item "Variable I/O voltage range: 1.8V to 3.3V"	1
• Updated to include variable IO capability - changed signal name "VDD33_IO" to "VDD_IO"	7
• Added variable IO capability	10
• Changed default values for LEDCR bits 6, 7, 8 from 1 to 0.	68
• Added variable IO capability	79
• V_{TH1} - max value deleted, 200mV typ value added	79

Revision History

Changes from Revision C (June 2013) to Revision D	Page
• Changed "Low Power Consumption: <205mW PHY and 275mW with Center Tap (Typical)" to "Low Power Consumption: Single Supply: <205mW PHY 275mW with Center Tap (Typical) Dual Supplies: <126mW PHY and 200mW with Center Tap (Typical)"	1
• Changed "Enables implementation of IEEE1588 Time Stamping at the MAC" to "Low Deterministic Latency Supports IEEE 1588 Implementations"	1
• Reorderd features list	1
• Changed "MII and RMII Interfaces" to "MII and RMII Capabilities"	1
• Changed "Error-Free Operation up to 150 Meters Under Typical Conditions" to "Error-Free 100Base-T Operation up to 150 Meters Under Typical Conditions Error-Free 10Base-T Operation up to 300 Meters Under Typical Conditions"	1
• Changed recommended transformer from Pulse HX1188 to Pulse HX1198	39
• Added Power Back Off Control Register (0AEh)	41
• Updated RMII Control and Status Register bit 5 description	67
• Deleted " Allow the system to reset the PHY using register access."	71
• Added parameters for dual-supply operation	78
• Added operating conditions for single and dual supplies	78
• Changed title from "Active Power" to "Active Power, Single Supply Operation"	80
• Added Dusl Supply Operation table	80

Copyright © 2011–2014, Texas Instruments Incorporated

PACKAGING INFORMATION

Orderable Device	Status (1)	Package Type	Package Drawing	Pins	Package Qty	Eco Plan (2)	Lead/Ball Finish (6)	MSL Peak Temp (3)	Op Temp (°C)	Device Marking (4/5)	Samples
TLK110PT	ACTIVE	LQFP	PT	48	250	Green (RoHS & no Sb/Br)	CU NIPDAU	Level-1-260C-UNLIM	-40 to 85	TLK110	Samples
TLK110PTR	ACTIVE	LQFP	PT	48	1000	Green (RoHS & no Sb/Br)	CU NIPDAU	Level-1-260C-UNLIM	-40 to 85	TLK110	Samples

(1) The marketing status values are defined as follows:
ACTIVE: Product device recommended for new designs.
LIFEBUY: TI has announced that the device will be discontinued, and a lifetime-buy period is in effect.
NRND: Not recommended for new designs. Device is in production to support existing customers, but TI does not recommend using this part in a new design.
PREVIEW: Device has been announced but is not in production. Samples may or may not be available.
OBSOLETE: TI has discontinued the production of the device.

(2) Eco Plan - The planned eco-friendly classification: Pb-Free (RoHS), Pb-Free (RoHS Exempt), or Green (RoHS & no Sb/Br) - please check http://www.ti.com/productcontent for the latest availability information and additional product content details.
TBD: The Pb-Free/Green conversion plan has not been defined.
Pb-Free (RoHS): TI's terms "Lead-Free" or "Pb-Free" mean semiconductor products that are compatible with the current RoHS requirements for all 6 substances, including the requirement that lead not exceed 0.1% by weight in homogeneous materials. Where designed to be soldered at high temperatures, TI Pb-Free products are suitable for use in specified lead-free processes.
Pb-Free (RoHS Exempt): This component has a RoHS exemption for either 1) lead-based flip-chip solder bumps used between the die and package, or 2) lead-based die adhesive used between the die and leadframe. The component is otherwise considered Pb-Free (RoHS compatible) as defined above.
Green (RoHS & no Sb/Br): TI defines "Green" to mean Pb-Free (RoHS compatible), and free of Bromine (Br) and Antimony (Sb) based flame retardants (Br or Sb do not exceed 0.1% by weight in homogeneous material)

(3) MSL, Peak Temp. - The Moisture Sensitivity Level rating according to the JEDEC industry standard classifications, and peak solder temperature.

(4) There may be additional marking, which relates to the logo, the lot trace code information, or the environmental category on the device.

(5) Multiple Device Markings will be inside parentheses. Only one Device Marking contained in parentheses and separated by a "~" will appear on a device. If a line is indented then it is a continuation of the previous line and the two combined represent the entire Device Marking for that device.

(6) Lead/Ball Finish - Orderable Devices may have multiple material finish options. Finish options are separated by a vertical ruled line. Lead/Ball Finish values may wrap to two lines if the finish value exceeds the maximum column width.

Important Information and Disclaimer: The information provided on this page represents TI's knowledge and belief as of the date that it is provided. TI bases its knowledge and belief on information provided by third parties, and makes no representation or warranty as to the accuracy of such information. Efforts are underway to better integrate information from third parties. TI has taken and continues to take reasonable steps to provide representative and accurate information but may not have conducted destructive testing or chemical analysis on incoming materials and chemicals. TI and TI suppliers consider certain information to be proprietary, and thus CAS numbers and other limited information may not be available for release.

In no event shall TI's liability arising out of such information exceed the total purchase price of the TI part(s) at issue in this document sold by TI to Customer on an annual basis.

TAPE AND REEL INFORMATION

REEL DIMENSIONS

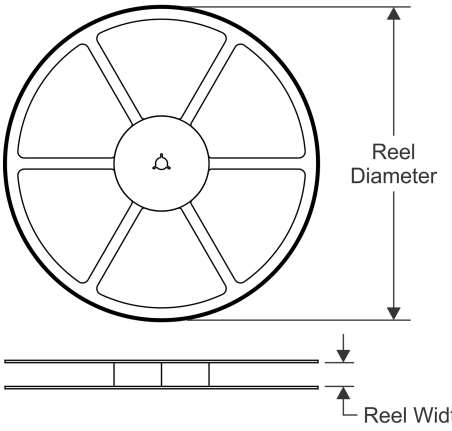

TAPE DIMENSIONS

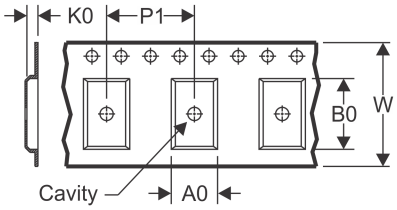

A0	Dimension designed to accommodate the component width
B0	Dimension designed to accommodate the component length
K0	Dimension designed to accommodate the component thickness
W	Overall width of the carrier tape
P1	Pitch between successive cavity centers

QUADRANT ASSIGNMENTS FOR PIN 1 ORIENTATION IN TAPE

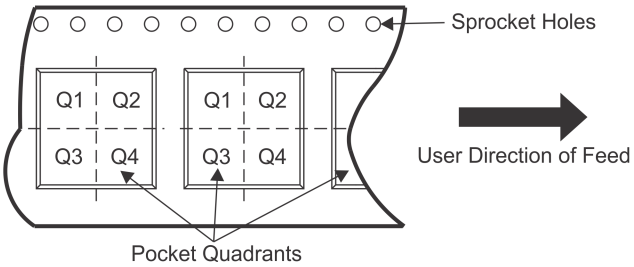

*All dimensions are nominal

Device	Package Type	Package Drawing	Pins	SPQ	Reel Diameter (mm)	Reel Width W1 (mm)	A0 (mm)	B0 (mm)	K0 (mm)	P1 (mm)	W (mm)	Pin1 Quadrant
TLK110PTR	LQFP	PT	48	1000	330.0	16.4	9.6	9.6	1.9	12.0	16.0	Q2

TAPE AND REEL BOX DIMENSIONS

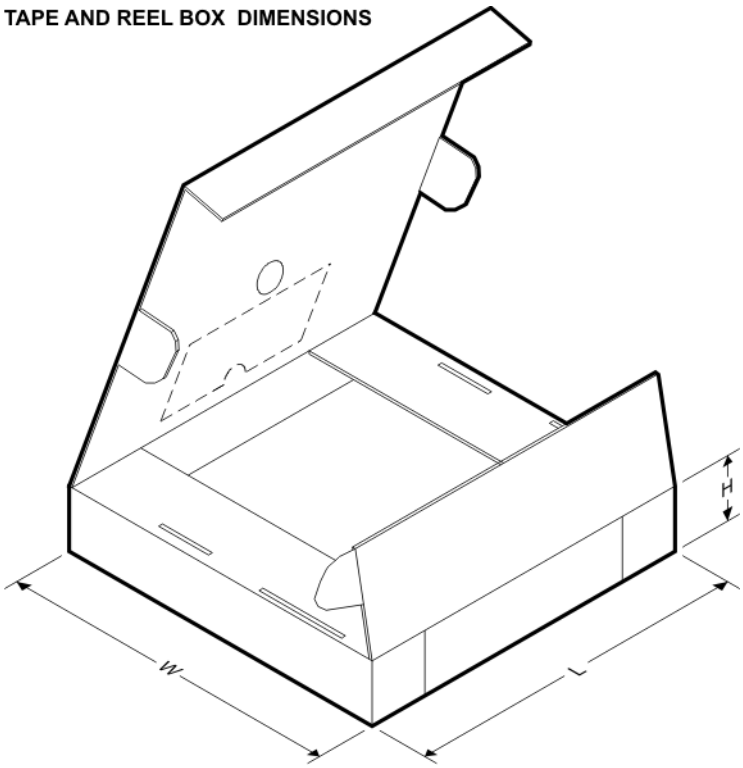

*All dimensions are nominal

Device	Package Type	Package Drawing	Pins	SPQ	Length (mm)	Width (mm)	Height (mm)
TLK110PTR	LQFP	PT	48	1000	333.2	345.9	28.6

PT (S-PQFP-G48) **PLASTIC QUAD FLATPACK**

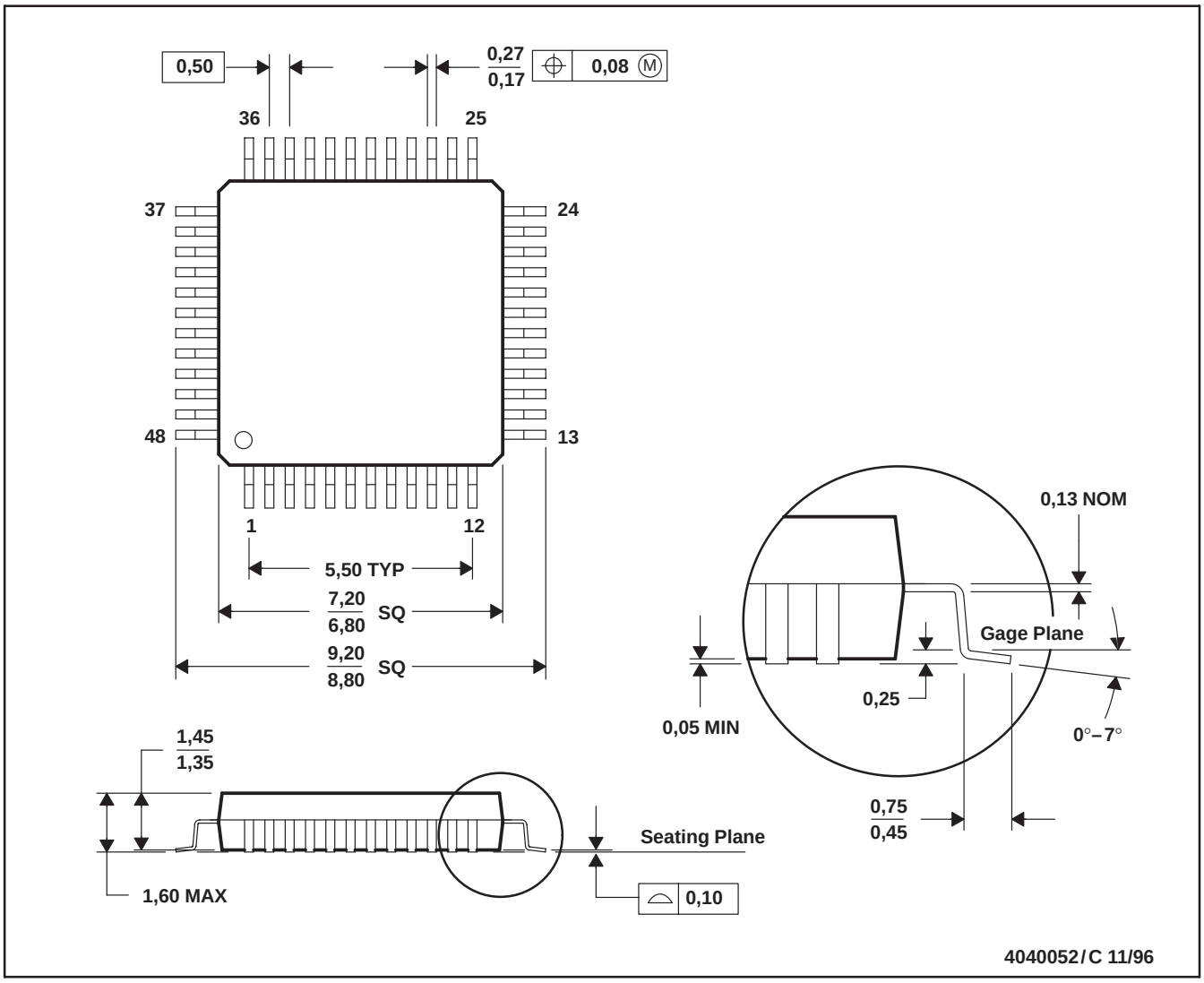

NOTES: A. All linear dimensions are in millimeters.
B. This drawing is subject to change without notice.
C. Falls within JEDEC MS-026
D. This may also be a thermally enhanced plastic package with leads conected to the die pads.

IMPORTANT NOTICE

Texas Instruments Incorporated and its subsidiaries (TI) reserve the right to make corrections, enhancements, improvements and other changes to its semiconductor products and services per JESD46, latest issue, and to discontinue any product or service per JESD48, latest issue. Buyers should obtain the latest relevant information before placing orders and should verify that such information is current and complete. All semiconductor products (also referred to herein as “components”) are sold subject to TI’s terms and conditions of sale supplied at the time of order acknowledgment.

TI warrants performance of its components to the specifications applicable at the time of sale, in accordance with the warranty in TI’s terms and conditions of sale of semiconductor products. Testing and other quality control techniques are used to the extent TI deems necessary to support this warranty. Except where mandated by applicable law, testing of all parameters of each component is not necessarily performed.

TI assumes no liability for applications assistance or the design of Buyers’ products. Buyers are responsible for their products and applications using TI components. To minimize the risks associated with Buyers’ products and applications, Buyers should provide adequate design and operating safeguards.

TI does not warrant or represent that any license, either express or implied, is granted under any patent right, copyright, mask work right, or other intellectual property right relating to any combination, machine, or process in which TI components or services are used. Information published by TI regarding third-party products or services does not constitute a license to use such products or services or a warranty or endorsement thereof. Use of such information may require a license from a third party under the patents or other intellectual property of the third party, or a license from TI under the patents or other intellectual property of TI.

Reproduction of significant portions of TI information in TI data books or data sheets is permissible only if reproduction is without alteration and is accompanied by all associated warranties, conditions, limitations, and notices. TI is not responsible or liable for such altered documentation. Information of third parties may be subject to additional restrictions.

Resale of TI components or services with statements different from or beyond the parameters stated by TI for that component or service voids all express and any implied warranties for the associated TI component or service and is an unfair and deceptive business practice. TI is not responsible or liable for any such statements.

Buyer acknowledges and agrees that it is solely responsible for compliance with all legal, regulatory and safety-related requirements concerning its products, and any use of TI components in its applications, notwithstanding any applications-related information or support that may be provided by TI. Buyer represents and agrees that it has all the necessary expertise to create and implement safeguards which anticipate dangerous consequences of failures, monitor failures and their consequences, lessen the likelihood of failures that might cause harm and take appropriate remedial actions. Buyer will fully indemnify TI and its representatives against any damages arising out of the use of any TI components in safety-critical applications.

In some cases, TI components may be promoted specifically to facilitate safety-related applications. With such components, TI’s goal is to help enable customers to design and create their own end-product solutions that meet applicable functional safety standards and requirements. Nonetheless, such components are subject to these terms.

No TI components are authorized for use in FDA Class III (or similar life-critical medical equipment) unless authorized officers of the parties have executed a special agreement specifically governing such use.

Only those TI components which TI has specifically designated as military grade or “enhanced plastic” are designed and intended for use in military/aerospace applications or environments. Buyer acknowledges and agrees that any military or aerospace use of TI components which have ***not*** been so designated is solely at the Buyer's risk, and that Buyer is solely responsible for compliance with all legal and regulatory requirements in connection with such use.

TI has specifically designated certain components as meeting ISO/TS16949 requirements, mainly for automotive use. In any case of use of non-designated products, TI will not be responsible for any failure to meet ISO/TS16949.

Products		**Applications**	
Audio	www.ti.com/audio	Automotive and Transportation	www.ti.com/automotive
Amplifiers	amplifier.ti.com	Communications and Telecom	www.ti.com/communications
Data Converters	dataconverter.ti.com	Computers and Peripherals	www.ti.com/computers
DLP® Products	www.dlp.com	Consumer Electronics	www.ti.com/consumer-apps
DSP	dsp.ti.com	Energy and Lighting	www.ti.com/energy
Clocks and Timers	www.ti.com/clocks	Industrial	www.ti.com/industrial
Interface	interface.ti.com	Medical	www.ti.com/medical
Logic	logic.ti.com	Security	www.ti.com/security
Power Mgmt	power.ti.com	Space, Avionics and Defense	www.ti.com/space-avionics-defense
Microcontrollers	microcontroller.ti.com	Video and Imaging	www.ti.com/video
RFID	www.ti-rfid.com		
OMAP Applications Processors	www.ti.com/omap	**TI E2E Community**	e2e.ti.com
Wireless Connectivity	www.ti.com/wirelessconnectivity		

Mailing Address: Texas Instruments, Post Office Box 655303, Dallas, Texas 75265
Copyright © 2014, Texas Instruments Incorporated